SURVEY AND ANALYSIS OF AIR-DEPLOYABLE IGNITERS

April 1986

Prepared by:

Spiltec
10541 Treeline Court
Anchorage, Alaska 99516

Under Contract to:

Shell Western E&P Inc.
601 W. 5th Avenue, Suite 810
Anchorage, Alaska 99501

for:

Alaska Clean Seas
12350 Industry Way
P.O. Box 196010
Anchorage, Alaska 99519

ACKNOWLEDGEMENTS

This report was prepared by Alan A. Allen, Spiltec. The project was administered by Shell Western E&P Inc.

Additional assistance was provided by:

James Lukin, Lukin Publications Management
Robert Ellis, Ellistrations

SURVEY AND ANALYSIS OF AIR-DEPLOYABLE IGNITERS

TABLE OF CONTENTS

	Page
PROJECT SUMMARY	S-1
1. BACKGROUND AND OBJECTIVES	1-1
2. IGNITER PERFORMANCE CRITERIA	2-1
3. EXISTING OIL SPILL IGNITION SYSTEMS	3-1
3.1 Environmental Protection Service (EPS) Igniter	3-2
3.1.1 Physical Description	3-2
3.1.2 Operational Considerations	3-4
3.2 Dome Igniter	3-6
3.2.1 Physical Description	3-6
3.2.2 Operational Considerations	3-9
4. POTENTIAL OIL SPILL IGNITION SYSTEMS	4-1
4.1 Laser Igniter	4-2
4.1.1 Physical Description	4-2
4.1.2 Operational Considerations	4-4
4.2 Helitorch Igniter	4-7
4.2.1 Physical Description	4-7
4.2.2 Operational Considerations	4-11
4.3 Premo Aerial Ignition Device	4-13
4.3.1 Physical Description	4-13
4.3.2 Operational Considerations	4-18
5. SUMMARY EVALUATION AND RECOMMENDATIONS	5-1
REFERENCES	R-1

LIST OF FIGURES

		Page
3-1	Environmental Protection Service (EPS) Igniter, or PYROID Igniter, Showing Internal Firing Mechanism	3-3
3-2	Basic Design and Internal Components of the Dome Petroleum Ltd. Igniter	3-7
3-3	Burning of Gelled Kerosene During Preheating of a Trapped Oil Slick with the Dome Igniter (Energetex Engineering)	3-8
3-4	Vapor Ignition and Initiation of Self-Sustaining Flame Over Oil Surrounding the Dome Igniter (Energetex Engineering)	3-8
4-1	Sequence of Events Involving the In-Situ Combustion of Oil on a Melt Pool Using a Laser-Ignition System	4-3
4-2	Primary Components of the Sling-Loaded Helitorch Ignition Device	4-8
4-3	Side View of a Helitorch Ignition Device Including Main Frame, Bail, and Electrical Cable (Canadian Forestry Service)	4-9
4-4	Ignition and Release of Gelled Fuel from a Helitorch Ignition Device (Canadian Forestry Service)	4-9
4-5	Blob of Gelled Gasoline Burning on a Gravel Surface (Canadian Forestry Service)	4-10
4-6	Polystyrene Spherical Containers Used to Hold the Potassium Permanganate Making up a Premo Aerial Ignition Device, or "AID" (Premo Plastics Engineering Ltd.)	4-13
4-7	Injection of AID with Glycol During Demonstration at Factory	4-14
4-8	Release of Flames from AID on Floating Oil Following Injection with Glycol	4-14
4-9	Primary Components of the AID Dispenser	4-16
4-10	AID Dispenser with Easily Removed Hopper and Feed-Chute Assembly	4-17
4-11	AID Dispenser with Hopper, Feed-Chute, and Exit-Chute Mounted and Ready for Use	4-17

LIST OF TABLES

Page

5-1 Summary of Igniter Characteristics and Performance..... 5-3/4

PROJECT SUMMARY

In-situ burning is one of several oil spill control measures that may be selected under certain circumstances to reduce the overall potential for environmental impact. The burning of oil in place may be a viable response option, particularly when it is unsafe or impractical to use physical removal techniques effectively. The most important, and often very difficult, step in conducting an in-situ burn is the safe and efficient ignition of the spilled oil. And when the oil is floating on water, the ignition process must usually be initiated from the air. This report contains the results of a one-year survey and analysis of existing and potential aerial ignition systems for initiating the combustion of floating oil slicks in arctic or subarctic conditions.

The performance criteria for a safe, cost-effective ignition system are numerous and difficult to achieve in a single ignition concept. This study provides an overview of key performance criteria, while describing the extent to which several ignition concepts meet or fall short of such requirements. The following ignition systems are assessed:

- EPS Igniter. Also known as the "PYROID" igniter, this pyrotechnic device was initially designed by the Canadian Defence Research Establishment, Valcartier (DREV), developed and tested by the Environmental Protection Service (EPS) as part of the Arctic Marine Oilspill Program (AMOP), and subsequently manufactured by ABA Chemical Ltd. (now Astra Pyrotechnics Ltd.) in Guelph, Ontario, Canada. The igniter, which measures 10 by 10 by 5 inches and weighs 4 1/2 lb, consists of incendiary materials and a firing mechanism sandwiched between two polystyrene flotation pads. Once the device is activated, a 25-second delay provides sufficient time to toss the igniter and let it settle within the target oil slick.

- Dome Igniter. Like the EPS igniter above, the Dome igniter is a lightweight pyrotechnic device intended for release by hand from a low-flying helicopter. The igniter was developed by Dome Petroleum Ltd., Calgary, Alberta, Canada, in cooperation with Energetex Engineering, Waterloo, Ontario, Canada. Measuring approximately 12 by 7 by 4 1/4 inches and weighing a little over 1 lb, the unit consists of a wire-mesh fuel basket with solid propellant and gelled

kerosene slabs suspended between two metal floats. The igniter is started with a separate electric ignition system that activates a 10-inch-long fuse wire. The fuse provides a delay of about 45 seconds.

- Laser Igniter. Under the sponsorship of the Environmental Protection Service, Environment Canada, and under contract to Arctec Canada Ltd., scientists with Physical Sciences Inc. (Andover, Massachusetts) have been successful in igniting pools of oil with a dual-laser approach. A continuous-wave CO_2 laser is used to heat a localized area of an oil pool to create surface temperatures above the oil's fire point. A focused high-powered pulse from a separate laser is then aimed at the vapors above the heated oil to ignite them.

- Helitorch Igniter. Though commonly used onshore by the U.S. and Canadian Forestry Services, the Helitorch shows promise of being useful for the ignition of floating oil slicks. The Helitorch is a completely self-contained unit consisting of a fuel barrel, pump, and motor assembly slung beneath a helicopter. The unit is controlled with an electrical connection from the Helitorch to a panel in the cockpit of the helicopter. When the unit is activated, gelled gasoline and/or kerosene is pumped from the fuel barrel to a specially designed orifice where it is ignited and released as a highly viscous stream of burning fluid.

- Premo Aerial Ignition Device (AID). The AID system has been examined since it could be adaptable to the design of a new and improved air-deployable igniter for floating oil slicks. As with the Helitorch, the AID has been used extensively in the forestry services for debris burning and forest fire control. Manufactured by Premo Plastics Engineering Ltd., Victoria, B.C., Canada, the Premo AID is a polystyrene spherical container about 1 1/4 inches in diameter with about 3 grams of potassium permanganate inside. Once the device is injected with a small volume of glycol, an exothermic reaction is initiated resulting in the melt-down of the spherical container, with flames lasting about 20 to 30 seconds.

Each of the above ignition concepts represents a relatively unique approach for initiating an in-situ burn. In spite of their differences, this report contains an assessment of each igniter's configuration and performance characteristics under a broad range of criteria. These performance criteria include 30 individual assessment points under the headings of safety, storage, government regulations, availability, cost, and operational considerations. The intent of this assessment is not to rank the ignition concepts, but to identify the strong and weak points for each system, thereby revealing the "ideal" characteristics for a new and improved igniter.

From a safety standpoint, all of the igniters described have certain obvious risks associated with their use. These risks, however, can be minimized through normal storage and handling precautions. One clear advantage of the Helitorch and laser concepts is that there is no need to be concerned about the handling of a device that has been released and which has failed to burn. It is also apparent that these two systems eliminate much, if not all, of the usual storage and handling requirements associated with pyrotechnic devices. There would normally be less time, effort, and money spent in complying with government regulations (compared to explosives storage and transport), and large numbers of igniters with relatively short shelf-lives would not have to be stockpiled and periodically replaced.

The availability issue is of particular importance, since the Dome igniter is the only proven igniter for floating oil slicks that is currently stockpiled in the U.S. and Canada. Of the pyrotechnic devices examined in this study, it is the only igniter for which raw materials are immediately available and for which emergency manufacturing could be started almost immediately.

In the final summary evaluation section (Section 5), information is provided on the relative merits of using individual hand-thrown devices versus "energy beams" or the broadcasting of many small and inexpensive igniters (or promoters) with an automatic dispenser. A rapid-fire broadcasting approach has many advantages (for example, when there are many 100's or 1,000's of isolated oil pools in close proximity to each other).

The desirable flame temperatures in excess of 2,000^{o}F and burn durations of 2 to several minutes for the EPS and Dome igniters may be difficult for the other ignition systems to match. As demonstrated in numerous field trials both in Canada and the U.S., an intense burn for several minutes (yet with a soft, unpressured flame) must be achieved for the proper exchange of heat in volatilizing and igniting the oil and sustaining the flame over a cold floating oil slick in arctic or subarctic waters. These and other desirable operating characteristics are discussed in Section 5, where some improvements and innovative ignition concepts that could be explored during future efforts are also presented.

1. BACKGROUND AND OBJECTIVES

The ignition of an oil spill is one of several techniques that may be selected to reduce the potential for environmental impact. The in-situ burning of oil may be of particular value in remote areas and under conditions that do not favor the physical removal of oil. The elimination of oil by burning may involve oil that has been spilled on land, solid ice, broken ice or water. In some cases the oil may be immobilized (or at least partially constrained) by the surface on which it has been spilled; for example, soil, ice and snow. Oil released from a blowout or a tanker accident into a moving ice field could become entrained in the ice and later surface as many thousands of individual pools of oil on melting ice in the spring. In other situations, the oil may exist as a floating slick partially or completely contained by a natural land or ice boundary, or perhaps by a fire-resistant boom. The feasibility of burning oil spilled under a broad range of environmental conditions has been examined by many researchers (Buist et al., 1983; Nelson and Allen, 1982; Energetex Engineering, 1981; Belicek and Overall, 1978; Pallister, 1978; Greene et al., 1977; Schultz, 1976; Golden, 1974; McLeod and McLeod, 1974; McMinn and Golden, 1973). It is this full range of potential burn situations that has been used in accomplishing the primary objective of this report; namely, to assess the operational characteristics of several existing and potential aerial ignition systems.

As will be described in Section 2, Igniter Performance Criteria, the successful operation of an igniter on floating slicks presents many of the most challenging operational requirements. Any ignition system that involves an object dropped onto an oil slick must produce a minimum of slick disturbance while delivering sufficient heat to volatilize the oil and then ignite the resulting vapors. Whatever the ignition system is, it must have a reasonable degree of success under a broad range of wind and sea conditions on slicks that would normally be considered combustible.

Research in the United States and Canada has repeatedly confirmed the feasibility of burning both fresh and weathered oil slicks on water (Buist et al., 1981; Industry Task Group, 1983). It is well known that combustion can be sustained as long as the heat feedback from the flames is enough to compensate for the heat loss to the water beneath the slick and provide the heat required to produce sufficient vapors for the fire. As soon as the burning layer of oil approaches a thickness of typically 1 to 3 mm (depending primarily on the type and age of the oil), excessive heat loss to the water will cause the fire to go out.

Any ignition system is therefore dependent upon the availability of oil sufficiently thick to support its sustained burning down to approximately 1 to 3 mm (or about 1/10 in.). Even under arctic conditions, oil being burned in-situ will normally have to be contained by natural barriers, wind-herded by natural or artificial means, and/or prevented from spreading by fire-resistant booms. Without containment, burn efficiencies of 50% to 60% or less may result even when the initial oil layer is in excess of the minimum burn thickness (Industry Task Group, 1983). With containment, however, 98% or more of the oil may be eliminated.

The above operating constraints, together with the results of U.S. and Canadian burn tests to date, have helped to focus the scope of this survey on relatively few (though promising) ignition systems. The work of others has been used wherever possible to help identify only those igniters that appear worthy of continued assessment and possibly additional testing. Many inquiries have been made to various military, industry, and government groups to identify ignition systems that may not have been tested as oil igniters, but which have some potential for spill control. This survey and analysis has been conducted as a first phase of a much larger effort to identify and construct some alternate ignition concept(s) that might prove more efficient and less costly than those currently available.

The ignition systems selected for examination in this first phase of the igniter development program include:

- EPS Igniter. Initially designed by the Canadian Defence Research Establishment, Valcartier (DREV), developed and tested by the Environmental Protection Service (EPS) as part of the Arctic Marine Oilspill Program (AMOP), and subsequently manufactured by ABA Chemical Ltd. (now Astra Pyrotechnics Ltd.), in Guelph, Ontario, Canada. The igniter is also known as the "PYROID" igniter, which is currently manufactured and marketed by Astra Pyrotechnics Ltd.

- Dome Igniter. Developed for Dome Petroleum Ltd, Calgary, Alberta, Canada, by Energetex Engineering, Waterloo, Ontario, Canada. The Dome igniter is currently manufactured by Energetex Engineering.

- Laser Igniter. Tested and evaluated by Physical Sciences Inc., Andover, Massachusetts, under contract to Arctec Canada, Ltd., for the Environmental Protection Service, Environment Canada.

- Helitorch Ignition System. A proven aerial ignition system for igniting forest slash, backfires on forest and range fires, and for field burning. Having been used extensively throughout the U.S., Canada and other countries, the Helitorch is currently available through the U.S. and Canadian Forestry Services and various suppliers (e.g., Simplex Manufacturing Co., Portland, Oregon).

- Premo Aerial Ignition Device. Another commonly used ignition system for controlled burning on land. The Premo Aerial Ignition Device (AID), sometimes referred to as the "ping-pong ball" igniter, is currently manufactured and marketed by Premo Plastics Engineering Ltd., Victoria, B.C., Canada.

2. IGNITER PERFORMANCE CRITERIA

The development of appropriate igniter performance criteria must reflect the kinds of oil spill "targets" on which the igniters are intended for use. Such targets might be single large spills that are relatively thick and continuous (e.g., at a major tanker accident), or they might be a large number of relatively small oil slicks spread over an extensive region. The latter case might result from the uncontrolled movement of a continuous oil spill into a moving broken ice field or beneath a moving solid ice cover over an extended period of time. It is this scenario involving a subsea blowout in the Beaufort Sea that has been of significant concern during several Canadian investigations into the feasibility of in-situ burning (Ross, 1981; Meikle, 1981). As the ice begins to melt in the spring, oil trapped in the ice would migrate to the surface of the ice through brine channels and accumulate on melt pools on the ice surface.

The potential for a major spill involving such widespread pools of oil is highly unlikely; however, if such a spill event occurred in the Arctic, it could require the release of many 100's to 1,000's of individual igniters. For this reason, some of the most important considerations for an effective igniter will involve the cost to manufacture and deploy the units, and the speed and accuracy with which they can be placed in the oil. Based on previous experimental tests with oil exposed during early breakup, it is quite reasonable to assume that the majority of oil available for burning in melt pools would exist in irregular pools typically 3 to 30 ft across on the average. Depending upon many conditions at the time of the spill (e.g., oil flow rate, amount of gas, ice condition and rate of movement, etc.), the spacing between such exposed oil pools could vary from only a few feet to a few hundred feet.

Other areas of consideration for a practical and efficient aerial ignition system must include safety, storage requirements, shelf life, durability, simplicity of design and use, availability (and construction time), and most

of all, reliability. An aerial igniter must consistently survive the fall and impact of a release from at least 30 to 50 ft altitude, land with minimal disturbance of the surface slick, provide sufficient heat to volatilize the oil nearby, and burn long enough and hot enough to create a self-sustaining flame over the oil surrounding the igniter. Ideally, the heat then generated from the burning oil at the igniter should be sufficient to promote flame spread over the entire slick.

The type of flame produced during the initial volatilization and vapor-ignition phase must be "soft." That is, the flames must not be blown at the oil/water surface causing the oil to move away from the igniter. A gentle, though very hot heat source must be oriented with the surrounding oil to minimize any disturbance of the slick while maximizing the transfer of heat to the oil. If possible, the ignition system should provide some means of isolating or protecting a portion of the oil from the effects of strong winds that might otherwise separate the igniter from the oil being heated and/or blow the initial flames completely out.

The shape of an igniter is important as it relates to the accuracy of the igniter's trajectory during freefall and as it influences the igniter's ability to stay on target. Should the igniter be too light and have a large cross-section, it may drift or be blown away too easily from its intended oil pool. The shape of the igniter must also be considered in minimizing any tendencies for the igniter to bounce or skip upon impact with a solid or shallow-water substrate. Upon impact, the igniter should suffer little or no damage, it should remain at or very close to its point of impact, and it should be able to function effectively independent of its orientation.

An important safety requirement for an aerial igniter is the need to have its starter (i.e., the "igniter" of the igniter) complete its function outside and away from the aerial platform being used. There should be no open flame or sparks produced within the aircraft. The starter mechanism should be sufficiently protected or isolated from the igniter to ensure that no igniter could possibly be activated prematurely. All handling of the igniter and its

starter should also be simple with instructions clearly marked on the unit so that relatively unskilled personnel could operate it safely.

In all cases (i.e., whether ignited prior to or after impact), the starter should be capable of activating the igniter even if the starter has become temporarily submerged or heavily doused with water. Once the igniter is fully activated, any sea state that might put the igniter out would also very likely prevent the formation of a combustible oil layer.

Other than the above economic and operational considerations, an acceptable aerial ignition system should also present little, if any, environmental concern. The igniter itself should be consumed in the resulting fire, or any parts remaining after a burn should cause an insignificant impact on the environment even when very large numbers are used. In addition, any igniter that fails to ignite should be safe to handle during its recovery. This inherent safety feature (following a misfire) could be related to the igniter's failsafe design or its subsequent decomposition during exposure to the environment.

3. EXISTING OIL SPILL IGNITION SYSTEMS

Two systems (the EPS and Dome igniters) are currently considered viable off-the-shelf aerial igniters for use in burning oil slicks with a satisfactory level of safety and reliability. The oil industry believes, however, that these igniters can be improved operationally and produced more economically. A physical description of each igniter is presented in this section, along with a discussion of the basic operational aspects of each system. Similar descriptions are presented in Section 4 for the three potential aerial igniters of oil (i.e., lasers, Helitorch, and Premo AID). Following these descriptions, a summary evaluation is presented in Section 5 along with recommendations for the continuing test and evaluation of promising new or improved concepts for igniting oil spills from the air.

The state-of-the-art in aerial igniter deployment concepts has been achieved in large part from the efforts of government, oil industry, and contractor support groups located in Canada (Energetex Engineering, 1978; Dickins, 1979; Meikle, 1981; Energetex Engineering, 1982; Twardawa and Couture, 1983). In this development effort, numerous ignition systems were considered including sodium-coated metal cylinders, sodium with gasoline, solid fuel and solid propellants, Thermite, hypergols, and various conventional flares. In addition, several starter concepts were also evaluated including chemical, electrical, fuse wire, mechanical, and radio-activated. The advantages and disadvantages of many of these concepts are summarized by Energetex Engineering (1978). From these efforts, the EPS and Dome igniters surfaced during the early 1980's as representative of what could be developed using the best available technology.

3.1 ENVIRONMENTAL PROTECTION SERVICE (EPS) IGNITER

3.1.1 Physical Description

The EPS igniter is an air-deployable pyrotechnic device developed by the Environmental Protection Service, Environment Canada, in cooperation with Defence Research Establishment, Valcartier (DREV) and the Arctic Marine Oilspill Program (AMOP). The igniter (Figure 3-1) is approximately 10 inches square and 5 inches high and weighs nearly 4 1/2 lb. The unit consists of a pyrotechnic device sandwiched between two layers of flotation and activated by a self-contained firing mechanism. It is intended to be a hand-thrown device for the ignition of contained spills where in-situ combustion has been approved and can be done without threat to personnel, equipment, and the environment.

Initially manufactured by ABA Chemical Ltd.(now Astra Pyrotechnics Ltd.), the EPS igniter has been marketed as the "PYROID" igniter. It is simple in design and operation, being activated by pulling on a firing clip which in turn strikes a primer cap. A 25-second delay column then provides sufficient time to toss the igniter and let it settle within the target oil slick. A specially formulated ring of fast-burning ignition composition is then ignited, and this in turn ignites the primary incendiary composition. The incendiary composition is basically a proven rocket motor propellant consisting of typically 40% to 70% ammonium perchlorate, 10% to 30% metal fuel (magnesium or aluminum), 14% to 22% binder, and small amounts of other ingredients to aid in the casting and curing processes. These materials have an estimated shelf life of about 5 years.

The firing mechanism and the incendiary materials are sandwiched between two polystyrene pads to provide both buoyancy and protection for the device on impact. All components except the firing mechanism are combustible, so that very little debris is left in the environment after a burn. These components have also been designed so that the igniter experiences a minimum of roll if dropped onto a hard surface or shallow water, so that the igniter can float in as little as 2 inches of water/oil, and so that the flame released will be

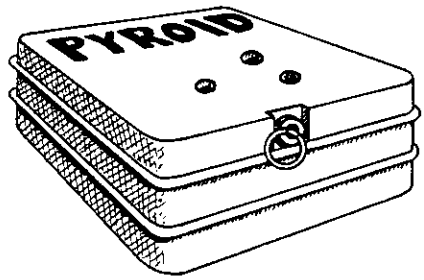

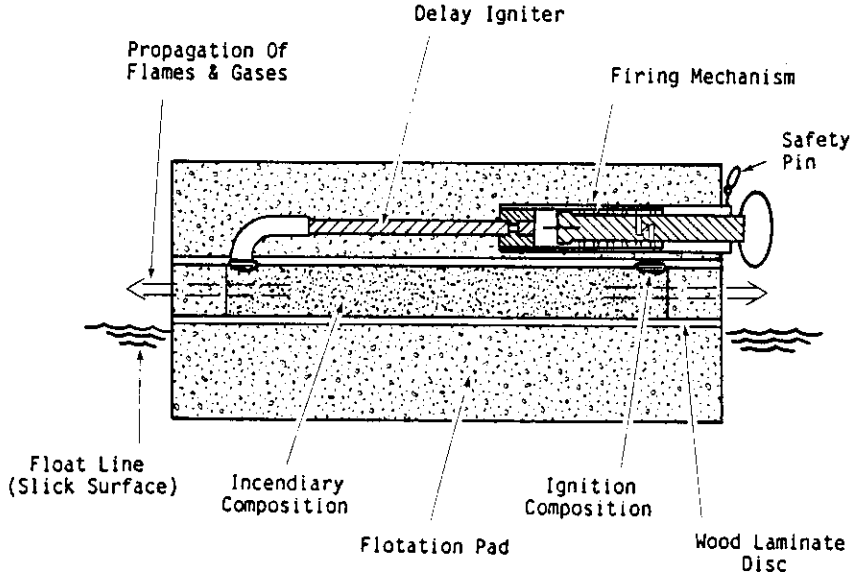

After: Twardawa & Couture, 1983.

FIGURE 3-1 ENVIRONMENTAL PROTECTION SERVICE (EPS) IGNITER, OR PYROID IGNITER, SHOWING INTERNAL FIRING MECHANISM AND PYROTECHNIC COMPONENTS

oriented properly with the oil regardless of which side of the igniter is up. The EPS igniter has been designed to produce a ring of fire with temperatures approaching 2,300^{o}C (4,172^{o}F) immediately adjacent to the perimeter of the igniter. This intense flame has a typical duration of about 2 minutes.

3.1.2 Operational Considerations

As with any igniter concept, safety is of paramount concern. The EPS igniter has been designed so that no open flames or sparks need be experienced aboard the deployment aircraft. Once the igniter is activated, however, there is no way to deactivate the igniter -- it must be removed from the aircraft before the 25-second delay period is up. Prior to activation, there is very little chance of an accidental firing because of the positioning of a safety pin in the firing mechanism.

As with any pyrotechnic device, precautions must be taken during all storage and handling to insure that the igniters are properly isolated from any ignition sources and that they are properly packaged and housed in a secure area. This area should be kept dry, and the packages should be labelled as "fireworks." The EPS igniter has been identified under the United Nations based system for classifying explosives as a Class 1 (explosives code within the Dangerous Goods grouping), Division 3 (pyrotechnic device), Group G material (Ross, 1984). The igniter has been designed to withstand a broad range of temperature, humidity, and vibration conditions, including temperatures as low as -58°F and as high as +122°F. Environmental test procedures and results are presented by Twardawa and Couture (1983).

The EPS igniter was designed to provide a 75% probability of functioning properly when dropped at an airspeed of about 15 kt from an altitude of approximately 50 ft. Actual field tests indicate that a much higher probability of success can be achieved during the first few years following construction. As the 5-year shelf life is approached, the probability of functioning properly begins to drop off. It is therefore important that stockpiled igniters be carefully dated and then reconstructed as their shelf life expires. It is anticipated that the cost of tearing down and replacing

the pyrotechnic portion of the igniter will run about 25% of the original purchase price. The purchase price is currently estimated at $80 to $100 U.S. per igniter, excluding any transportation costs from the factory. The current manufacturer of the EPS igniter is:

Astra Pyrotechnics Ltd.
P.O. Box 908
Guelph, Ontario, Canada N1H 6M6
(519) 822-2133

Training and actual field experience with the EPS igniter are important because of the potential hazards of any misuse of the igniter. The operation of the igniter itself, however, is quite straightforward, and only a few minutes of instruction in its proper use are needed. The greatest difficulty is in developing the skill to adequately time the activation and release of the igniter for an accurate drop on a target slick. Practice will be required for appropriate coordination between the pilot of the aircraft and the individual(s) releasing the igniters.

As with any ignition system, care must be given to avoid wasting igniters on films that could not support combustion with any number of igniters, no matter how accurately they are placed. If an individual slick is targeted, it should be at least large enough that there is a reasonable chance that the slick can be hit and that the slick contains oil at least a few tenths of an inch thick. Air speed and altitude will have to be adjusted to provide optimum viewing and igniter-release conditions, while avoiding any unnecessary disturbance of the surface slicks.

The EPS (or PYROID) igniter represents a safe, compact and reasonably reliable system for igniting isolated, contained oil slicks offshore. Recognizing the cost per igniter and the number that can reasonably be released (typically 3 to 6 per minute and 50 to 100 per sortie), the overall success of an ignition program with the EPS (or any other) igniter will depend on a number of factors including the number of slicks to be ignited, their distance and spacing offshore, the number of aircraft available, weather conditions, and the number of igniters that can be made available on short notice.

3.2 DOME IGNITER

3.2.1 Physical Description

The Dome Igniter is a lightweight, air-deployable pyrotechnic device developed by Dome Petroleum Ltd., Calgary, Alberta, Canada, in cooperation with Energetex Engineering, Waterloo, Ontario, Canada. The igniter (Figure 3-2) measures approximately 12 by 7 by 4 1/4 inches and weighs a little over 1 lb. The unit consists of a wire-mesh fuel basket with solid propellant and gelled kerosene slabs suspended between two metal floats. Like the EPS igniter, the Dome unit is intended as a hand-thrown device for the ignition of contained spills where in-situ combustion of oil has been approved and can be done without threat to personnel, equipment, and the environment.

The Dome igniter is currently manufactured by Energetex Engineering and has come to be known in some regions of the U.S. and Canada as the Energetex igniter or the "tin-can" igniter. It has gone through a few design changes since it was first tested by Dome during the winter of 1979/1980. These changes have involved the igniter's mode of activation and the way in which certain components in its fuel basket are isolated from each other. In order to avoid any need for open flame during activation, the fuse wire is now started with a specially designed electric ignition system referred to as the Energetex Engineering Ignition System (EEIS). Consisting of a 12-volt, spill-proof battery with a gel electrolyte and a conveniently mounted heater element, the EEIS can provide sufficient heat to activate the igniter's fuse wire within 2 seconds of contact. Once started, the 10-inch-long fuse wire provides about 45 seconds of delay for tossing the igniter and allowing it to settle within the target oil slick.

The time-delay safety fuse then ignites a thermal igniter wire, which in turn ignites the solid propellant slabs located above and below the igniter wire. The solid propellant burns intensely for about 10 seconds with temperatures in excess of 3,700^{o}F. During this initial burn, the gelled kerosene then begins to burn producing temperatures of 2,200^{o}F to 2,400^{o}F (Figure 3-3). The total burn time for the igniter is about 10 minutes.

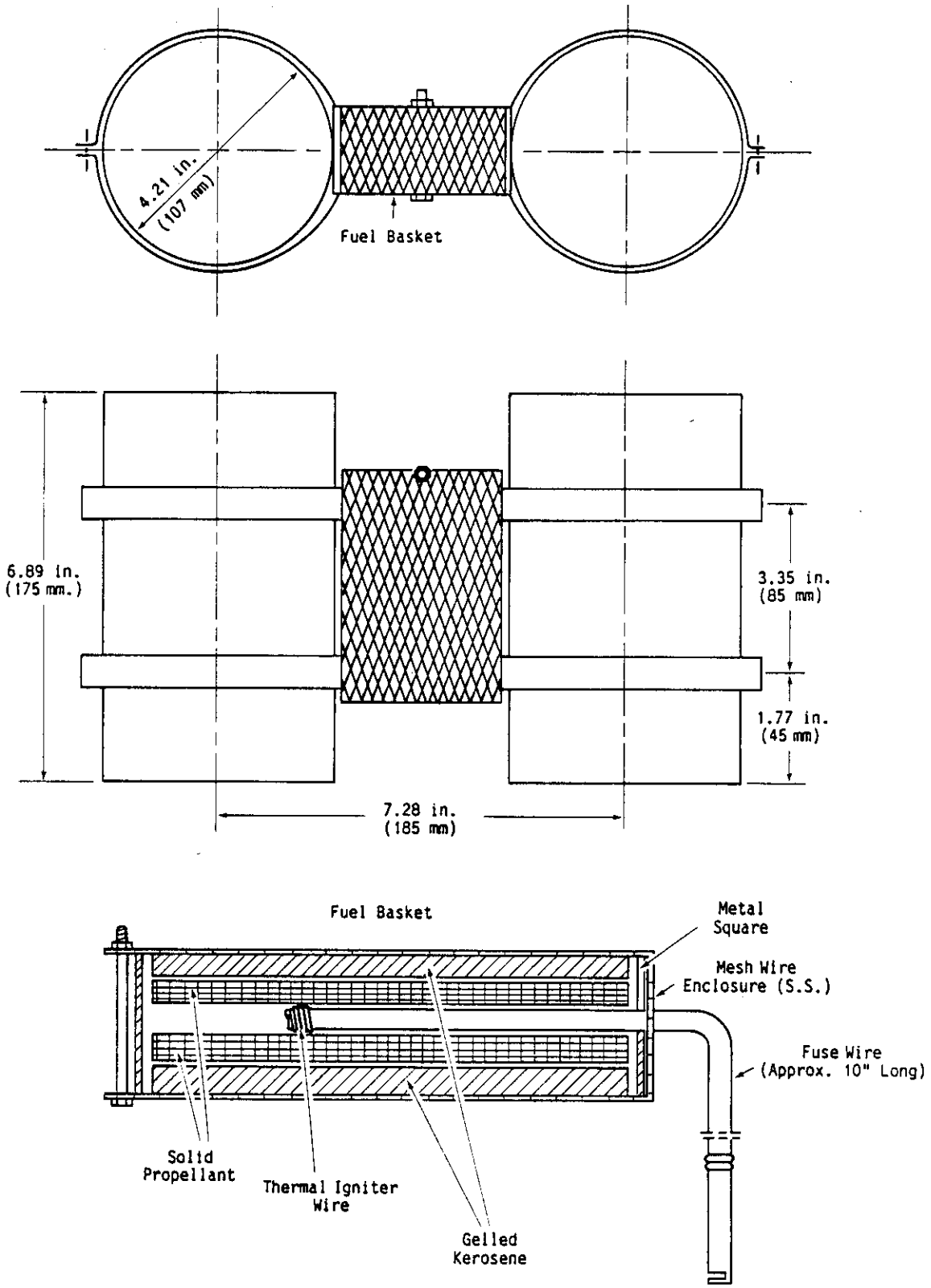

FIGURE 3-2 BASIC DESIGN AND INTERNAL COMPONENTS OF THE DOME PETROLEUM LTD. IGNITER

FIGURE 3-3 BURNING OF GELLED KEROSENE DURING PREHEATING OF A TRAPPED OIL SLICK WITH THE DOME IGNITER (ENERGETEX ENGINEERING)

FIGURE 3-4 VAPOR IGNITION AND INITIATION OF SELF-SUSTAINING FLAME OVER OIL SURROUNDING THE DOME IGNITER (ENERGETEX ENGINEERING)

Because of the very shallow draft of the igniter, the fuel basket housing the propellant and gelled kerosene is suspended above the oil layer. The oil between the floats and beneath the fuel basket is somewhat shielded from the wind, so that the warming and volatilization of the oil are enhanced. When the oil is sufficiently heated, the flames directly beneath and around the igniter soon become self-sustaining (Figure 3-4). The relatively long burn-time for the Dome igniter helps keep the slick lit if winds temporarily separate the igniter from the heaviest concentrations of oil. Upon completion of the burn, all of the metal components of the igniter remain at the surface of the water and attached to the two floats.

The lightness and irregular shape of the igniter are desirable because these characteristics give the igniter a relatively low impact velocity and a tendency to avoid rolling. The igniter has only two stable positions in which it can float, and either one keeps the igniter's flames in close proximity to and slightly above the oil.

3.2.2 Operational Considerations

As with the EPS ignition system, the Dome igniter must also be treated with great care during activation and release. The fuse wires must be kept away from any potential sources of ignition. Once activated, the igniter cannot be deactivated, and it must be released as soon as possible (at least 20 to 30 seconds before the normal 45-second delay period is up). Proper packaging in separate plastic bags and storage of the units in cardboard boxes onboard the aircraft should be sufficient to prevent any accidental activation of an igniter.

The Dome igniter fits the same classification for explosives as the EPS igniter, and as a result need only be stored in a spark-free, dry area and be packaged and properly marked like any fireworks type of explosive. The igniters should be stored in a secure place, safely removed from any heat sources and other flammable materials. The Dome igniter has undergone rigorous testing involving a broad range of temperatures ($-76^{o}F$ to $+122^{o}F$) and vibration and humidity conditions normally used for such explosives

manufactured and used in Canada. The igniter should have no trouble with the environmental conditions that it would normally be exposed to during storage, transit, and use in Alaska.

The simplicity of design of the Dome igniter provides a very high probability of success. Its starter fuse and ignition wire have at least a 95% reliability, and the success to date both in the U.S. and Canada suggests that the probability of activating the entire contents of the fuel basket is in excess of 90%. As with any pyrotechnic device, the probability of success is expected to diminish as the shelf life of each unit is approached.

The shelf life of the Dome igniter is estimated at about 5 years. Therefore, it is important that any stockpiled igniters be carefully dated and reconstructed as their shelf life expires. It is estimated that tearing down and replacing the pyrotechnic portion of the igniter will cost approximately 50% of the original purchase price. The Dome igniter is currently priced at about $40 to $60 U.S. per igniter, excluding any transportation costs from the factory.

The current manufacturer of the Dome igniter is:

Energetex Engineering
P.O. Box 744, Suite 9
498 Albert St. (Parkdale Plaza)
Waterloo, Ontario N2J 4C2
(519) 743-7191

Any training in the basic operation of the Dome igniter is likely to be minimal (typically less than 10 minutes). However, because of the difficulty of accurately selecting suitable target slicks and hitting them from a moving helicopter, some practice will definitely be required of those personnel expected to deploy the units in an actual spill.

Tests in both the United States and Canada have shown that the Dome igniter is a safe, lightweight, reliable ignition device for operations involving a

slow-moving helicopter at an altitude of 50 to 100 ft. As with any mechanical system, considerable care and practice will be needed for activating and accurately releasing each igniter. Because each igniter must be released by hand, excellent coordination between the pilot of the aircraft and the individual(s) deploying the igniters is needed for burning a large number of individual slicks over an extensive area. The rate at which such slicks could be burned would obviously be limited by the expected deployment rate of about 3 to 6 igniters per minute. And, recognizing that each unit occupies about 1/4 ft^3, each helicopter sortie would normally be limited to a few hundred igniters.

4. POTENTIAL OIL SPILL IGNITION SYSTEMS

For use in igniting oil from the air, the Dome and EPS igniters described in Section 3 must be released manually one at a time from a slow-moving helicopter. Depending on the number, spacing, and location of the slicks relative to the staging area, the number of aircraft available, weather conditions, etc., this method of deployment may not be the most cost-effective and timely way to ignite an extensive region of individual slicks. The concepts described in this section for igniting oil slicks are therefore presented as potential options in the continuing search for additional methods of carrying out large-scale in-situ burning operations. These methods, or variations/combinations of them, may eventually provide techniques to supplement existing mechanical devices such as the EPS and Dome igniters.

Physical and operational characteristics are presented in this section for the following:

- Laser igniter
- Helitorch igniter
- Premo Aerial Ignition Device (AID)

4.1 LASER IGNITER

4.1.1 Physical Description

During the past few years, serious consideration has been given to the feasibility of using lasers to ignite oil spills on water. Under the sponsorship of the Environmental Protection Service, Environment Canada, several laboratory and controlled field tests have been conducted to establish the feasibility of igniting oil slicks with commercially available lasers. Under contract to Arctec Canada Ltd., scientists with Physical Sciences Inc. (PSI), Andover, Massachusetts, have tested various laser techniques, successfully igniting warm and cold oil slicks of varying types and degrees of weathering. This approach is considerably different than the pyrotechnic ignition devices described in the previous sections; however, the long-range objective is similarly the ignition of large numbers of remote oil slicks. Such a spill scenario could conceivably result from the disabling of a tanker or from a blowout where oil is released into a moving ice field and later surfaces as many thousands of individual pools of oil in the spring.

PSI representatives have been successful in using a dual-laser approach in starting fires in pooled oil. Working with laboratory conditions and with cold oil layers under simulated arctic conditions, they used a continuous-wave CO_2 laser to heat a localized area of an oil pool to create surface temperatures above the oil's fire point (Figure 4-1). The heating time varies with the oil type and condition, air temperature, wind conditions, etc., but is typically a few seconds to more than 30 seconds. A focused high-power pulse from a second laser is then aimed at the vapors above the heated oil layer to ignite them. These tests have been conducted to determine the preheating and ignition requirements to provide an adequate flame that will be both self-sustaining and intense enough to insure the spread of flame over the entire pool of oil.

Frish et al. (1985) summarizes the above heating mechanisms, specific operating characteristics of the lasers used, and the detailed results of many tests conducted thus far. For the purposes of this igniter survey, it is

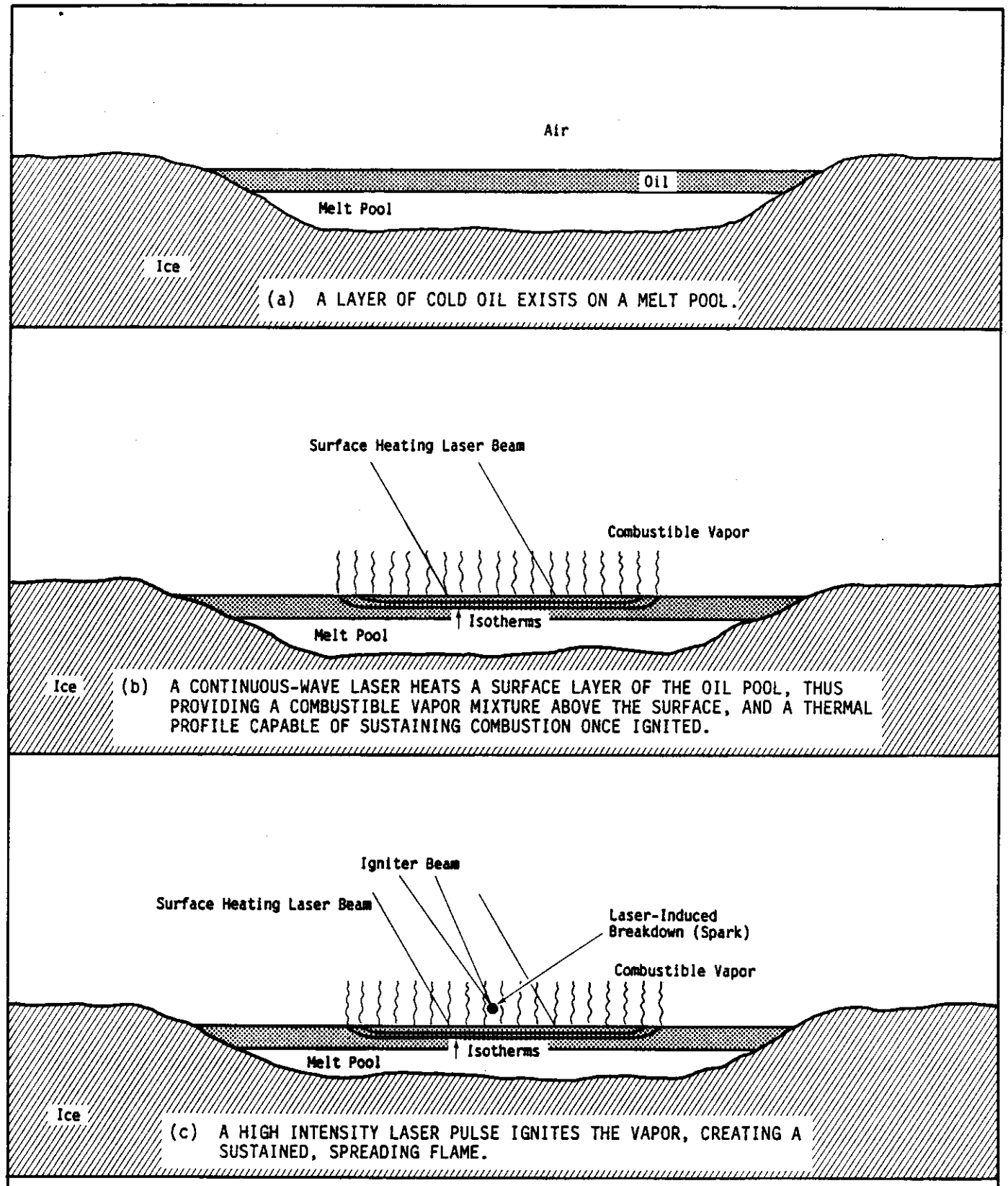

(After: Frish, et al., 1985)

FIGURE 4-1 SEQUENCE OF EVENTS INVOLVING THE IN-SITU COMBUSTION OF OIL ON A MELT POOL USING A LASER IGNITION SYSTEM

sufficient to note that existing laser packages have been demonstrated and proven successful in igniting cold oil layers under controlled, small-scale, static conditions. With some modifications, such laser systems should be adaptable for mounting in helicopters. Based on the experiences to date, it is clear that a considerable effort is still required to design and test helicopter-mounted optical systems for focusing the laser beams, shock-mounts to absorb unwanted vibrations, and a number of systems that will be necessary to accurately aim at and determine the range to a spill target.

4.1.2 Operational Considerations

From an operational standpoint, the potential use of lasers for igniting surface slicks still remains dependent upon a number of important and unanswered questions. These concerns include the success with which a beam of sufficient energy from a laser that is mounted in a moving and heavily vibrating helicopter can be focused upon a slick that is in motion from wind, waves and currents. The 10 to 30 seconds typically required for adequate preheating of the slick, and the areas (typically 4 to 8 inches in diameter) heated with a single beam, suggest that it will be no simple undertaking to keep the laser concentrated on the same portion of a slick throughout the preheating time. This constraint upon the thermal transfer requirements for ignition is further complicated by the effects of wind in carrying any resulting vapors away during the preheating period. There will be situations, of course, when the target slicks are calm, thick concentrations of oil resting on shallow melt pools. The air could be relatively still, and/or the air immediately over the slicks could be protected by the surrounding ice and snow rising above the oil layer. In such situations the laser ignition system may prove to be especially effective.

The above-mentioned concerns and many other operational considerations are currently under investigation, with sponsorship continuing through the Environmental Protection Service, Environment Canada. This work is being performed by:

Physical Sciences Inc.
Dascomb Research Park
P.O. Box 3100
Andover, Massachusetts

and

H. Aass Aerospace
Division of H. Aass Aero Engineering Ltd.
Ottawa, Ontario, Canada

The results of this work should indicate whether it is appropriate to develop and field-test a fully operational helicopter-mounted laser-ignition system. In the meantime, it is important to recognize a few significant aspects of the laser approach to igniting spills, regardless of the outcome of this ongoing research. The time required to complete an ignition, for example, will probably be at least 20 to 30 seconds. This time, together with the time needed to reposition for the next ignition, would mean that only 1 to 2 ignitions per minute could be completed under ideal conditions. Such a rate of starting burns is approximately 1/3 the expected rate using hand-thrown pyrotechnic devices.

From a safety standpoint, the kind of lasers that would be used for igniting oil slicks would not present any unusually hazardous situations or exposures for the personnel operating the equipment. Federal Aviation Regulations (FAR, Part 29 and ANSI Z136.1) would be implemented to insure appropriate "airworthiness" for all systems and to insure that adequate eye protection is used at all times.

The size and power requirements of any final system design will most likely limit the selection of a suitable helicopter to aircraft such as the Sikorsky S-61, Bell 214, Aerospatiale 332, or comparable. It is anticipated that the laser package will probably require at least a 20-kilowatt auxiliary power supply with 230 volts, 3-phase output.

Although the laser ignition system still remains unproven as a practical, cost-effective means of igniting remote oil slicks, results of static tests so

far are promising. A final system configuration could conceivably cost between 1/2 and 3/4 million dollars; however, this price could easily be offset by the cost of individual pyrotechnic devices required to achieve the same level of response capability.

4.2 HELITORCH IGNITER

4.2.1 Physical Description

The Helitorch is an ignition system which uses burning gelled gasoline or kerosene released from a helicopter-slung unit. It is a proven aerial ignition system commonly used by the U.S. Forest Service and the Canadian Forestry Service for the burning of forest slash and for setting backfires during fire-control operations. The Helitorch has not been used to ignite waterborne oil spills; however, there is reason to believe that the same ignition concept may have some merits for the burning of oil slicks in situ.

The Helitorch is a completely self-contained unit consisting of a fuel barrel, pump, and motor assembly slung beneath a helicopter and controlled with an electrical connection from the Helitorch to a panel in the cockpit. The fuel barrel is filled with a gelled gasoline or gasoline-and-diesel mix (basically napalm) which is pumped upon demand to a positive-control shut-off valve and ignition tip (Figures 4-2 and 4-3). The gelled mixture is ignited as it is pumped from the unit, and a highly viscous stream of burning fluid is produced (Figure 4-4). Some systems rely on electrical ignition alone, while others have been modified to incorporate an electrically activated propane flame to insure positive and continuous ignition of the fluid as it is released. As the burning fluid falls from the unit, it soon breaks up into fireballs, the size of which depends upon the viscosity of the mix and the airspeed of the helicopter.

The size of the fireballs at ground level also depends on the altitude upon release. For example, if released from a height of approximately 300 ft at an airspeed of 60 mph, a typical mixture of gelled gasoline will produce burning gel/gas particles the size of golf balls at ground level. These burning blobs will flatten out upon impact on a hard surface (Figure 4-5) and burn for approximately 8 to 10 minutes. If the same material is released from a height of 150 ft at an airspeed of 30 mph, the burning particles will normally be about the size of baseballs, with a sustained burn time on the ground of 12 to 17 minutes. Because such releases are normally conducted over trees and other

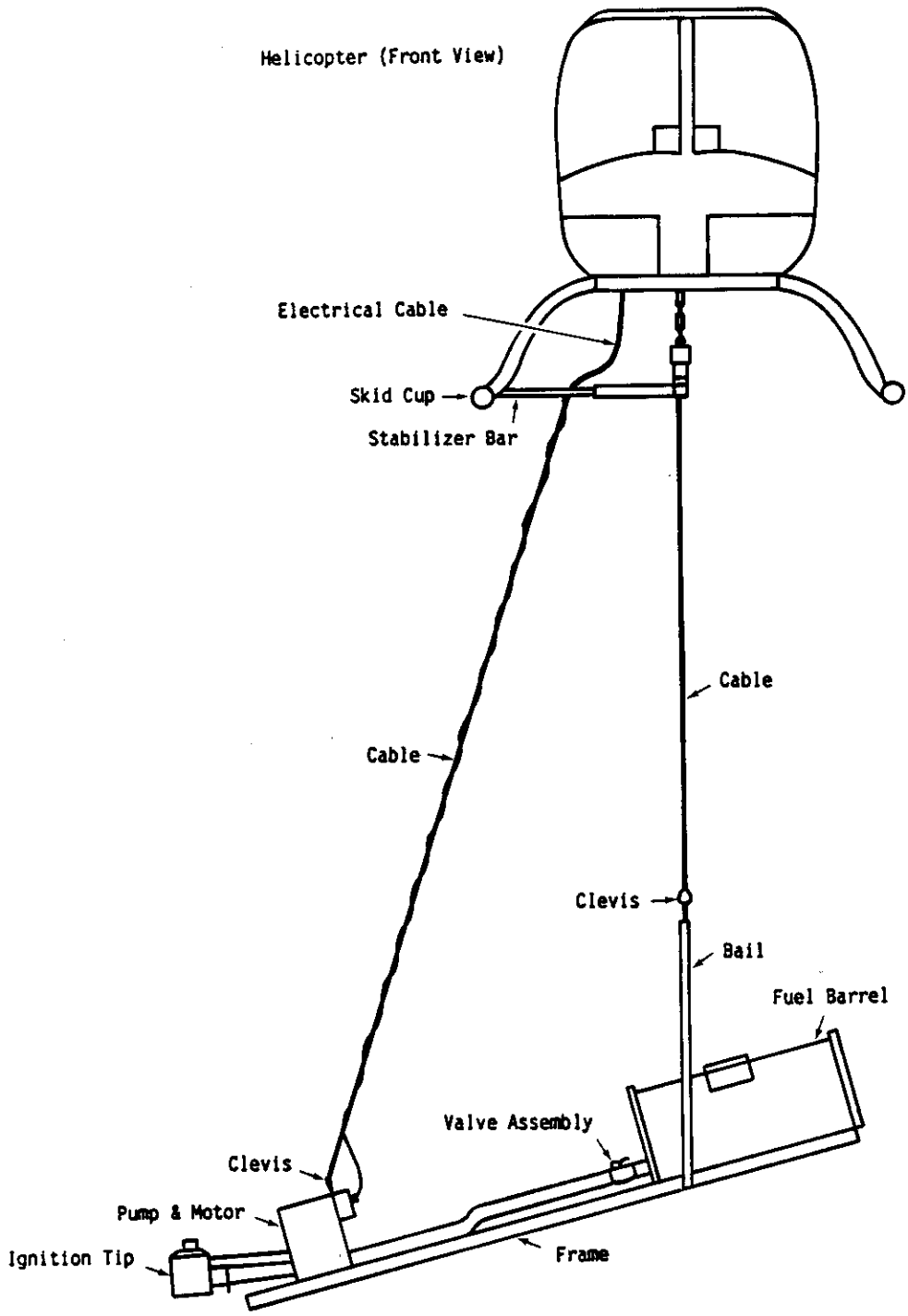

FIGURE 4-2 PRIMARY COMPONENTS OF THE SLING-LOADED HELITORCH IGNITION DEVICE

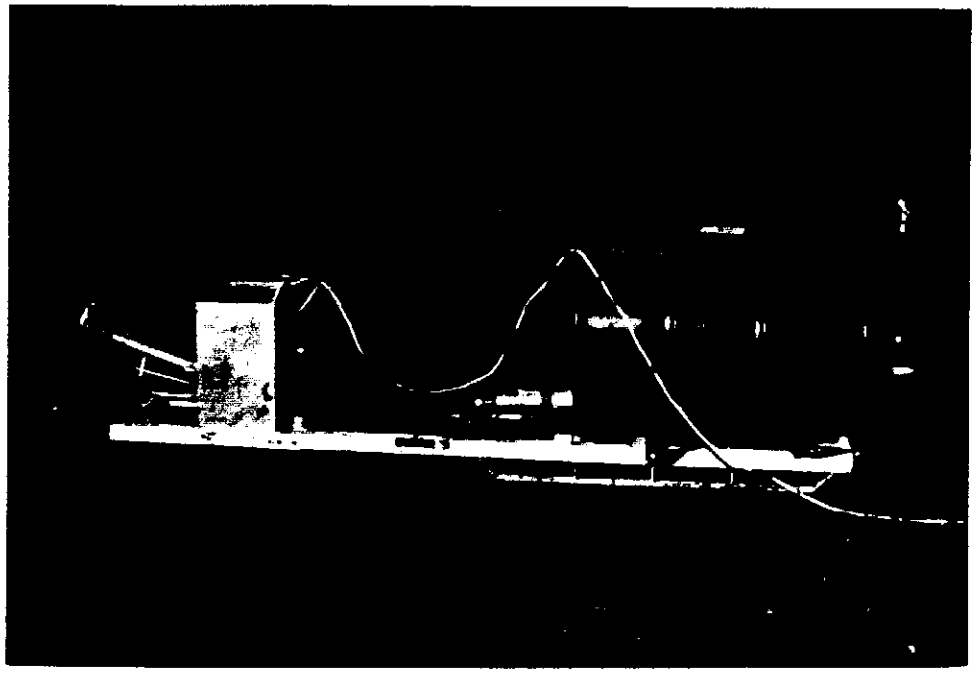

FIGURE 4-3 SIDE VIEW OF A HELITORCH IGNITION DEVICE INCLUDING MAIN FRAME, BAIL, AND ELECTRICAL CABLE (CANADIAN FORESTRY SERVICE)

FIGURE 4-4 IGNITION AND RELEASE OF GELLED FUEL FROM A HELITORCH IGNITION DEVICE (CANADIAN FORESTRY SERVICE)

debris, comparable data has not been found for the results of aerial drops from much lower altitudes.

The Helitorch ignition system is manufactured by Simplex Manufacturing Co. in Portland, Oregon, and is approved by the Federal Aviation Administration (FAR Part 137). The unit can be carried by any helicopter with a cargo hook and 28-volt power supply. The weight of the package with a full 55-gal drum is approximately 534 lb. When it is operated with a fan nozzle, an effective swath width of 15 to 30 ft can be achieved. The manufacturer recommends a gelled fuel application rate of 1.5 to 3 gal per acre. If flown at normal application speeds (say 30 to 60 mph), the Helitorch can produce initial burn exposure rates in excess of 3 acres per minute while releasing the gelled fuel. At 3 gal per acre, a 55-gal payload would provide approximately 18 minutes of application time per sortie.

FIGURE 4-5 BLOB OF GELLED GASOLINE BURNING ON A GRAVEL SURFACE (CANADIAN FORESTRY SERVICE)

4.2.2 Operational Considerations

It must be emphasized that the feasibility of using the Helitorch approach for igniting floating oil has not been demonstrated. Operators familiar with Helitorch activities, however, have expressed support for the potential of such use based on previous experiences where burning gelled gasoline has landed on water. Since the gelled medium is lighter than water and it becomes a frothed burning layer upon impact, it is reasonable to assume that the burning mass could possibly float and interact favorably with a fairly thick layer of oil. If tests were conducted and the results with floating oil proved acceptable, experiments could be conducted with various mixtures, spray equipment, and application heights/speeds to determine the optimum fire-exposure characteristics for the kinds of oil slicks that might be encountered.

The use of a Helitorch for initiating in-situ burning, if successful, could provide a most efficient means of covering large areas of oiled ice or floating slicks very rapidly. Where hundreds to thousands of individual oil pools are close but isolated from each other, this random spray technique could be the most cost-effective way of igniting a majority of the oil.

Helitorch operations have been sufficiently practiced and implemented over the past decade that specific guidelines have been established for safe and efficient handling of the petroleum products used and the procedures for deployment. Detailed operating manuals exist, and training programs are carried out routinely in many parts of the country. Each Helitorch is normally handled by a ground crew of 4 people thoroughly familiar with the procedures for mixing fuel and thickening compounds (typically Alumagel or Surefire), and with the techniques for rapidly replacing empty drums on the Helitorch frame. As with any aerial ignition system, considerable practice is required of the pilot and any crew used in delivering the ignited product effectively to the target.

Should a Helitorch-like system be adapted for use on oil spills, it is quite likely that it would suffer from some of the same drawbacks that currently

exist for onshore operations. The mixing of the petroleum product(s) and the gelling agent, for example, should be done at air temperatures that are preferably above 32°F. The colder the gasoline being used, the longer it will take for the mixture to gel. It is also important to insure that no water is introduced during the mixing process since as little as 2% water can seriously degrade the gelling process. Considerable care must be taken throughout the mixing process to be sure that the gelling agent is used in correct amounts and that it is mixed uniformly. Improper mixing can result in a very strong gel at the bottom of a container, topped with completely ungelled fuel.

Helitorch units and Surefire Gel can be obtained from:

Simplex Manufacturing Co.
13340 N.E. Whitaker Way
Portland, Oregon 97230
(503) 257-3511

The cost of a Helitorch system is currently about $4,700. Compared to other ignition techniques, this cost is fairly low; however, the 4 to 6 lb of gelling agent required per 55-gal drum could run as much as $20 to $25 per drum of gelled fuel. This cost must be added to the cost of the fuel itself.

All factors considered, if the gelled-fuel approach can be perfected to provide the proper interaction with and ignition of floating oil, the relatively low costs and the potential efficiencies of such a rapidly deployed system which leaves no igniter debris behind could warrant further consideration. A particularly good mix for gelling fuel is a product known as Surefire (also distributed by Simplex). Surefire has been used effectively at low air/fuel temperatures (i.e., 32°F), and it has an indefinite shelf life.

4.3 PREMO AERIAL IGNITION DEVICE

4.3.1 Physical Description

The Premo Aerial Ignition Device (AID) is an ignition concept that could lend itself to the design of a new and improved air-deployable igniter for floating oil slicks. The igniter has undergone much development work by Mr. Gary Lait, Fire Research Technician with the Canadian Forestry Service, Victoria, British Columbia, and is currently manufactured by Premo Plastics Engineering Ltd., Victoria, B.C. A proven and very reliable igniter for debris burning and forest fire control, the Premo AID is a polystyrene spherical container about 1 1/4 inches in diameter with approximately 3 grams of potassium permanganate inside (Figure 4-6). Once the container is injected with a small volume (typically 1 cc) of glycol (Figure 4-7), an exothermic reaction is initiated resulting in the destruction of the spherical container with flames lasting about 20 to 30 seconds (Figure 4-8).

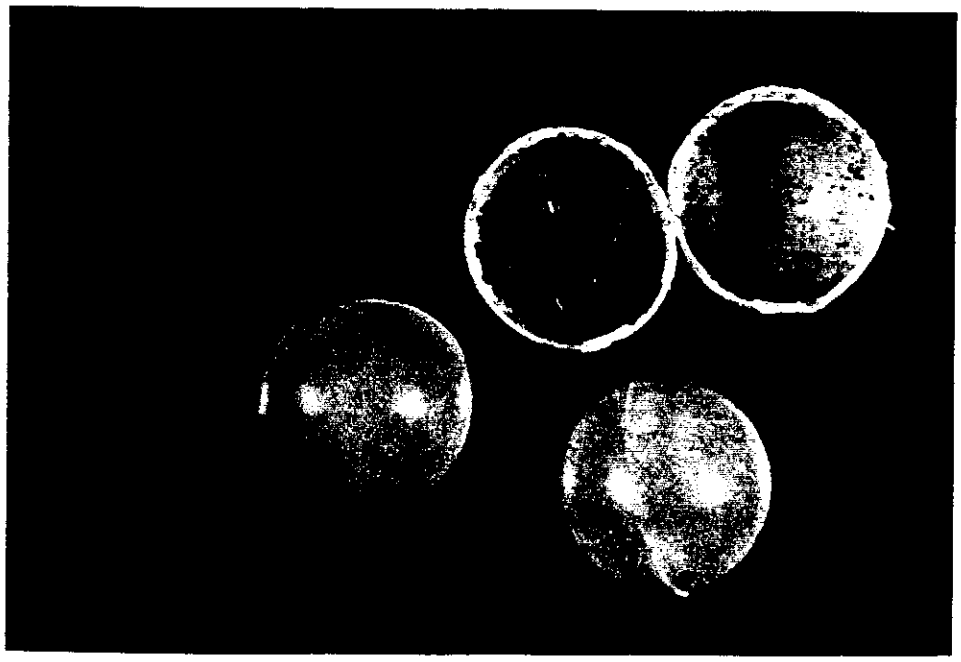

FIGURE 4-6 POLYSTYRENE SPHERICAL CONTAINERS USED TO HOLD THE POTASSIUM PERMANGANATE MAKING UP A PREMO AERIAL IGNITION DEVICE, OR AID (PREMO PLASTICS ENGINEERING LTD.)

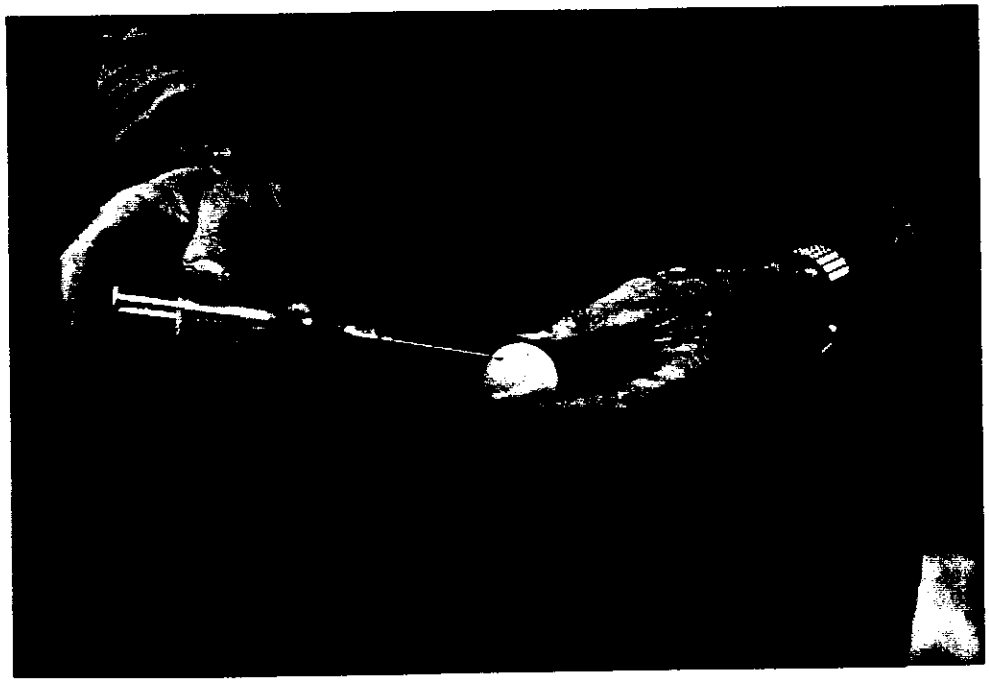

FIGURE 4-7 INJECTION OF AID WITH GLYCOL DURING DEMONSTRATION AT FACTORY

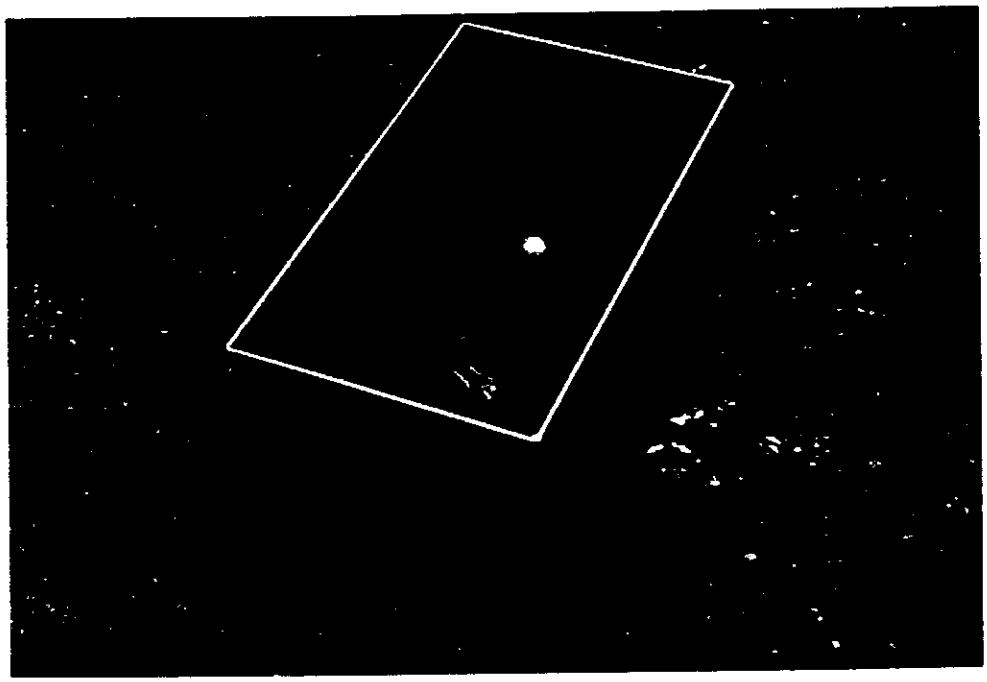

FIGURE 4-8 RELEASE OF FLAMES FROM AID ON FLOATING OIL FOLLOWING INJECTION WITH GLYCOL

The particle size and concentration of the chemicals involved will determine the rate of the resulting chemical reaction. Experience has shown, for example, that water-glycol solutions ranging from 50% to 100% concentration of glycol will provide reliable ignition with a time delay of up to 30 seconds. By varying the grain size and the volume of potassium permanganate, one could seek the optimum reaction and flame size for varying needs. The chemical composition used for AID deployment on land is clearly not appropriate for the ignition of oil slicks. Numerous tests have been conducted with the AID on water in its present configuration. In all tests, the igniter is easily doused and sunk if water is splashed into the burning ball. With minor modifications, however, it may be possible to utilize an AID-like device as the starter for an attached component capable of sustaining a long-burning, high-intensity flame. This and other concepts will be discussed in Section 5.

Another very appealing aspect of the Premo AID approach is the dispenser that has been developed for rapid deployment of the devices from a helicopter. The dispenser has evolved to the Mark III version depicted in Figure 4-9. Its primary function is to inject a controlled amount of glycol into each AID, thereby initiating the exothermic reaction, and then to expel the primed devices at a very high rate. The dispenser is constructed of welded aluminum, and it is shaped to accommodate the rear door sill of a Bell 206 helicopter (Figures 4-10 and 4-11). Auxiliary support brackets for attachment to other helicopters are available from the manufacturer.

Inside the AID dispenser are four chutes that feed the devices from the storage hopper into four separate chambers. Within these chambers, the igniters are sequentially injected with the glycol and then immediately ejected from the exit chute at the bottom. The maximum ejection rate is 3 igniters per second when the dispenser is operated with the exit chute fully open and with its camshaft speed at its highest setting. The dispenser also contains a water reservoir that feeds an internal fire-extinguishing system in the event of any malfunction within the unit. Held in place with tie-down straps and operated with a quick break-away connection on its power cable, the dispenser can be jettisoned quickly in an emergency.

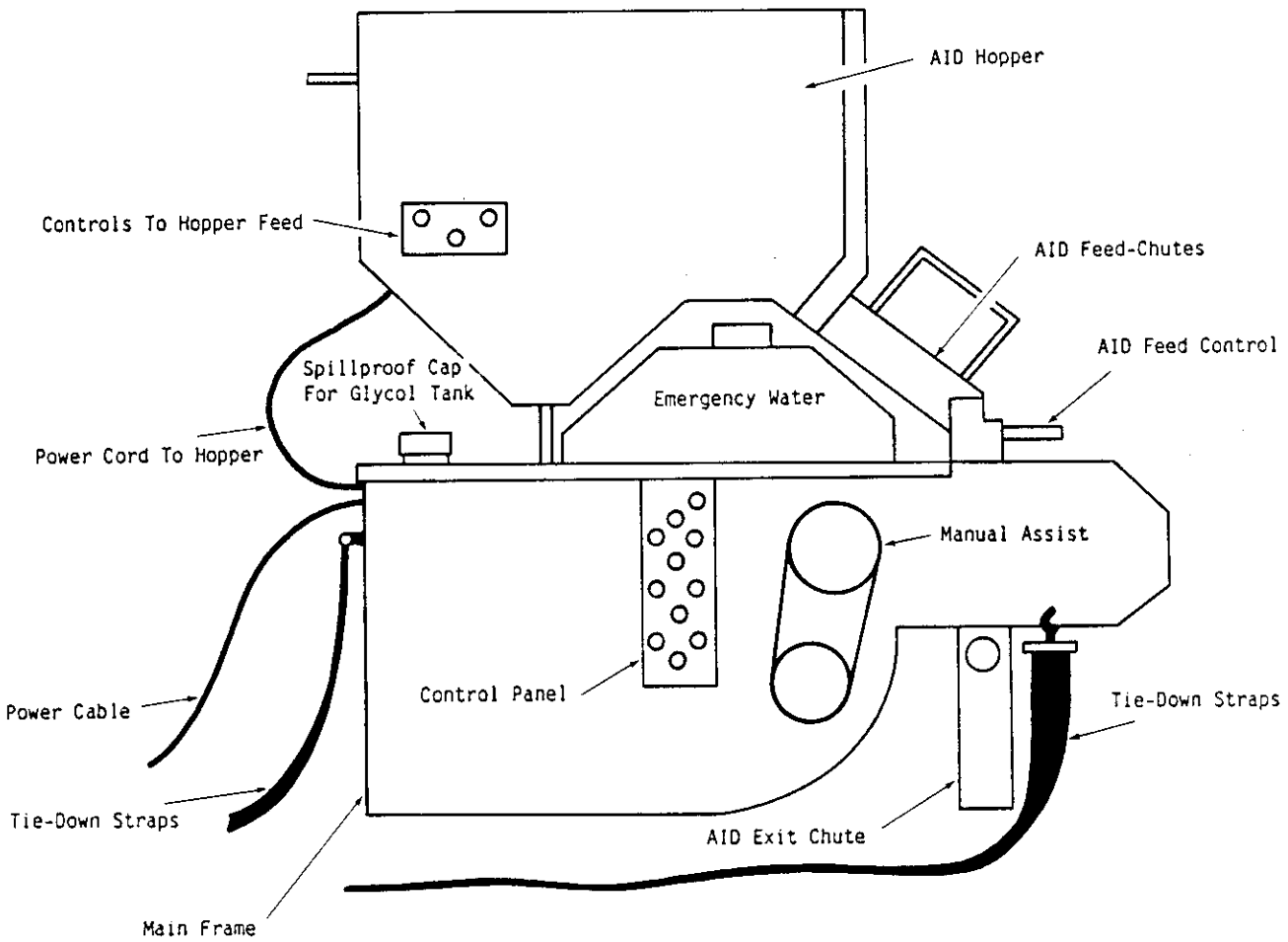

FIGURE 4-9 PRIMARY COMPONENTS OF THE AID DISPENSER

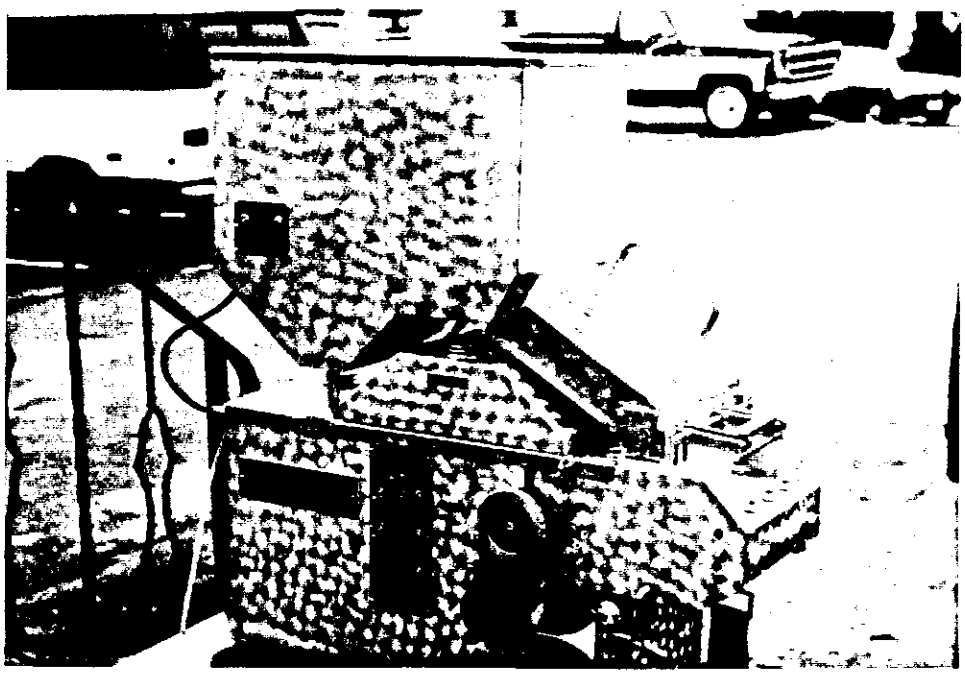

FIGURE 4-10 AID DISPENSER WITH EASILY REMOVED HOPPER AND FEED-CHUTE ASSEMBLY

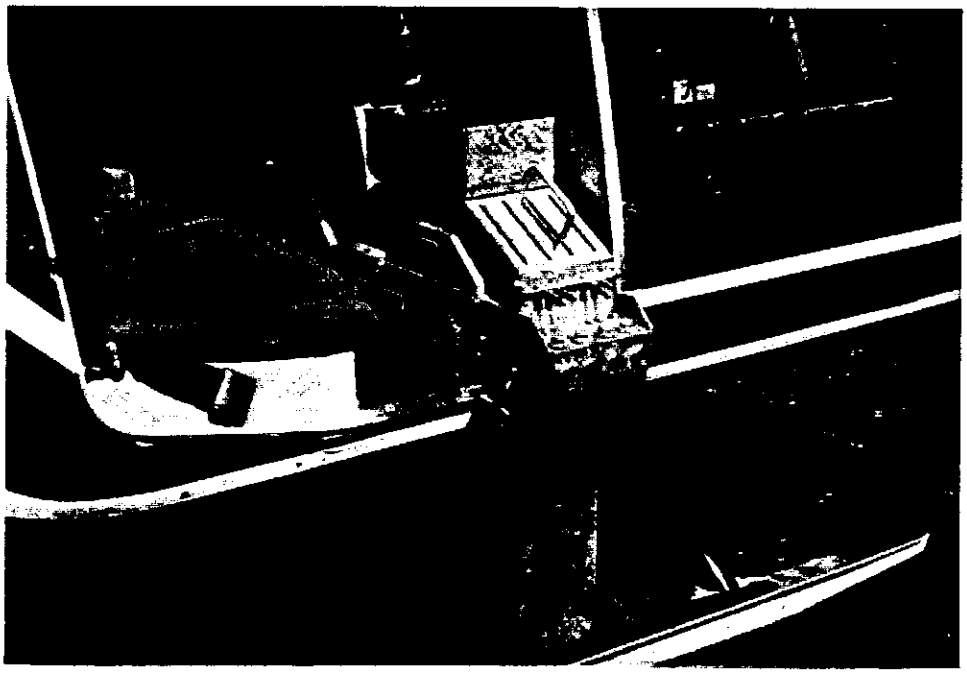

FIGURE 4-11 AID DISPENSER WITH HOPPER, FEED-CHUTE, AND EXIT-CHUTE MOUNTED AND READY FOR USE

The entire AID dispenser, including full hopper (450 AID devices), full glycol tank (2.4 U.S. gal), full water tank (0.8 U.S. gal), and all accessories, weighs just under 100 lb. The dispenser is approximately 27 by 11 by 26 inches in length, width, and height; and it can be operated with a 12- or 24-volt DC power source.

4.3.2 Operational Considerations

The Premo AID and dispenser system described above is not presented as an igniter package that is ready as is for the potential ignition of oil slicks on water. Under certain conditions involving calm, thick pools of warm, fresh oil, it is quite likely that the Premo igniters could be effective in initiating many in-situ burns. This system, however, would require considerable modifications in order to make it useful on the full range of oil slicks and environmental conditions that could occur in the arctic and subarctic regions of Alaska.

Because of its unique advantages of size, rate of application, safety features, and cost, this system deserves further examination. If similar igniters can be developed with comparable dependence upon two separate chemicals that can be brought together quickly and easily, such a "starter" would be quite safe and easy to store over extended periods. If, in addition, the main fuel supply could be introduced quickly and easily at the time of need, then there would be little or no concern over the safety and product-deterioration aspects of maintaining a ready supply of igniters.

Use of the Premo ignition system in its present configuration requires very little training. The system is easily adapted to a broad range of helicopter types, and it is quite economical to operate. The current price for the AID devices is about $110 per 1,000 igniters, or approximately 11 cents each. The AID dispenser is currently selling for about $5,000, excluding any shipment costs.

Additional information can be obtained from the manufacturer at:

Premo Plastics Engineering Ltd.
863 Viewfield Rd.
Victoria, B.C., Canada V9A 4V2
(604) 382-3023

It would be most desirable to develop a comparably simple and inexpensive igniter that could be used on a one-by-one basis (i.e., without a rapid-fire dispenser) when needed on individual spills requiring only one or two igniters. The same igniter might also be adaptable for release from a dispenser (similar to the Premo dispenser) when needed for the ignition of numerous, though closely spaced, oil slicks or pools on ice.

5. SUMMARY EVALUATION AND RECOMMENDATIONS

A comparison of the existing and potential oil slick ignition devices discussed in this report has been attempted in this section in spite of the very different operational modes of the five systems selected. The objective of making this comparison is not to provide a ranking of the igniters, but to provide a factual basis from which desirable and undesirable igniter characteristics can be identified. By comparing the five ignition concepts within a sufficiently broad range of assessment criteria, it is hoped that the strong and weak points for each system will help reveal the "ideal" characteristics for a new and improved igniter.

Table 5-1 covers 30 carefully selected assessment criteria grouped under the categories of safety, storage, government regulations, availability, cost, and operational considerations. These criteria are addressed for the two proven pyrotechnic devices currently available; for the laser ignition system, which is still in an early experimental stage; and for two systems that are well-developed and proven techniques for initiating burns on land, but have never been tested for the ignition of floating oil slicks.

From a safety standpoint, none of the igniters should present any serious threat to human life and equipment due to open flames or sparks onboard the aircraft being used. All igniter concepts, except for the Helitorch, have a very low susceptibility to any accidental activation. Once in flight, the Helitorch is also quite safe with respect to the pilot and helicopter; however, there must be an unusually strict set of guidelines for the safe mixing of highly flammable liquids and their transfer between containers onsite. Particular care must also be exercised in selecting a flight path with a sling-loaded cargo of flammable liquid.

One particularly good point about the Helitorch and laser concepts is the fact that there is no need to be concerned about the handling of an igniter that has been released and which has failed to burn. In the other systems there is

the remote possibility that an unactivated unit might drift and be retrieved by someone who is unfamiliar with the potential dangers of the unit. This concern may be of particular importance in the event that many hundreds or thousands of units are deployed over a large spill area. In most cases the device would normally be safe to handle by experienced personnel within a very short period (normally less than 2 minutes). And, in cases where the unit was not retrieved immediately, sea-water exposure would normally render the unit safe for handling by almost anyone within a matter of hours.

Another important difference between the units involving pyrotechnic devices and those not containing such components is the fact that the pyrotechnic components will almost always become less reliable with time, particularly as the system's shelf life is approached. Should it be necessary to store large numbers of igniters, the cost and inconvenience of having to replace a portion of every igniter every 5 years could become a very significant concern. The laser, Helitorch, and AID-like ignition concepts could eliminate much, if not all, of the usual storage and handling costs and headaches. These concepts may also require much less time, effort, and money for complying with government regulations associated with explosives storage and transport. There would still be additional requirements to comply with all regulations governing product transit to the spill site and deployment activities; however, the costs and precautions associated with stockpiling explosives (or "fireworks") could be alleviated or eliminated.

The availability issue is probably the most important factor for deciding what will be used in the event of a spill or stockpiled prior to a spill. Currently, the only proven igniter for floating oil slicks that is stockpiled in the U.S. and Canada is the Dome igniter. This igniter is also the only one for which raw materials are immediately available and for which emergency manufacturing could be started almost immediately. The Dome igniter also costs about half as much as the other proven pyrotechnic igniter.

If an effective system can be developed involving lasers, the Helitorch, or an AID-like device, such an ignition concept would play an important role in supplementing the existing technology using pyrotechnics. Individual,

TABLE 5-1

SUMMARY OF IGNITER CHARACTERISTICS AND PERFORMANCE

ASSESSMENT CRITERIA	EPS IGNITER	DOME IGNITER	LASERS	HELITORCH*	AID-LIKE DEVICE**
SAFETY					
Open flame or sparks inside aircraft	None	None	N.A.	None	None
Susceptibility to accidental activation	Highly unlikely (requires removal of safety pin)	Highly unlikely (requires separate ingition source)	Highly unlikely (positive off/on control)	Unlikely (positive off/on control)	Unlikely (chemical starter probably isolated from fuel)
Retrieval and handling of igniters that have misfired	Safe to handle after 2-min. delay	Safe to handle after 2-min. delay	N.A.	N.A.	Uncertain
STORAGE					
Shelf life	5 years	5 years	N.A.	N.A. (Flammable mixture prepared at time of need)	Indefinite
Difficulty of replacement (all or in part) following normal shelf life	Relatively simple replacement of pyrotechnic portion only (about 25% of initial cost)	Relatively simple replacement of pyrotechnic portion only (about 50% of initial cost)	N.A.	N.A.	N.A.
Routine maintenance requirements	None	None	Minimal	Minimal (pump, valves, stirring equipment, etc.)	Minimal (moving parts)
Susceptibility to high or low temperatures during storage/transit	Very low (tested between -58°F and +122°F)	Very low (tested between -76°F and +122°F)	Currently under investigation	Gel-mixing process best carried out at or above freezing air temperatures	No anticipated concerns
Susceptibility to vibration or humidity during storage/transit	Very low (meets military requirements)	Very low (meets military requirements)	Currently under investigation	Vibration - No problem. Must keep gel-mixing process free of water	No anticipated concerns
GOVERNMENT REGULATIONS					
Shipping and storage restrictions	Basically treated as fireworks. Housed and locked in non-sparking container, properly marked as fireworks. Shipment by land, sea or chartered aircraft permitted; shipment by commercial passenger aircraft prohibited.	Basically treated as fireworks. Housed and locked in non-sparking container, properly marked as fireworks. Shipment by land, sea or chartered aircraft permitted; shipment by commercial passenger aircraft prohibited.	Subject to Federal Aviation Regulations (Part 29) regarding "airworthiness" and ANSI Z136.1 regarding laser safety considerations, eye protection, etc.	Subject to same storage and transit requirements for petroleum products. Cannot fly Helitorch over populated areas. (FAA Part 137 approved)	Requirements should be even less restrictive than for EPS and Dome igniters. Components kept separate.

* Or comparable system involving the continuous spraying of a burning fluid or gelled substance

** Continuous automatic ejection of modified Premo AID-like igniters with delayed-reaction chemical starters (final concept yet to be designed and tested)

TABLE 5-1 (Cont'd)

ASSESSMENT CRITERIA	EPS IGNITER	DOME IGNITER	LASERS	HELITORCH*	AID-LIKE DEVICE**
AVAILABILITY					
Currently stockpiled	All stockpiles currently depleted	Approx. 1,700 igniters at Prudhoe Bay (owned by Alaska Clean Seas); approx. 4,000 igniters at Tuktoyuktuk, Canada (owned by Dome)	Current laser system is experimental only	Numerous units available in U.S. and Canada	None (under development)
Resupply capability	Typically 2,000 to 3,000 igniters per month once raw materials on hand	Typically 4,000 to 6,000 igniters per month once raw materials on hand	Current laser system is experimental only	Under emergency conditions, approx. 20 Helitorches per month	None (under development)
COST					
Estimated cost ($U.S./igniter) at factory	$80 to $100 (depending on volume purchased)	$40 to $60 (depending on volume purchased)	$½ million to $3/4 million	Approx. $4,000 per application unit. Approx. $20 to $25 for gelling agent per drum of gasoline (or gasoline/ deisel mix)	Uncertain
OPERATIONAL CONSIDERATIONS					
Level of field testing performed to date	Moderate. Mostly small controlled spills	Extensive. Many controlled spills and some actual spills	Static, small-scale tests only. No helicopter-mounted tests yet	Extensive experience on land. No experience with oil on water	Small-scale testing of AID alone on water. Final concept unproven
Reliance upon unique airborne application device	None	None	Yes. Continuous-wave CO_2 laser plus a high-powered pulse laser	Yes. Helitorch frame and pump assembly	Yes, possibly similar to Premo AID system (may also have hand-release capability)
Igniter (and/or application system) preparations--from storage to field use	None	None	Extensive. Mounting brackets, auxiliary power, focusing/ stabilizing equipment, and calibration	Minor setup. Self-contained package quickly prepared and sling-loaded	Likely minor setup. Self-contained unit should be quickly installed
Average rate of application	Approx. 3 to 6 per min.	Approx. 3 to 6 per min.	Approx. 1 to 2 ignition attempts/min.	Burning globules (golf ball size) over a swath 10 ft wide; typically about 1-mile-long runs per sortie at 25 to 30 mph and at 50-ft altitude or less	Unknown
Approximate number of igniters releasable per helicopter sortie	Typically 50 to 100 depending on helicopter selected and ability to set down for transfer of cargo to passenger area	Several hundred depending on helicopter selected and ability to set down for transfer of cargo to passenger area	N.A.		Unknown
Accuracy of deployment on target oil slick	Good. New design reduces tendancy to roll. Still may bounce/skip on ice. Some drift while airborne	Excellent. Irregular shape prevents rolling. Low drift while airborne	Excellent (Assuming stabilization, focusing, and range requirements are met)	Random distribution of burning gel over target area	Possible random distribution of small and inexpensive igniters
Durability (or resistance to damage during impact)	Good. Designed for typical drop heights of 50 to 100+ft onto frozen surface	Good, designed for typical drop heights of 50 to 100 ft onto frozen surface	N.A.	N.A.	Anticipate light, durable igniters

* Or comparable system involving the continuous spraying of a burning fluid or gelled substance
** Continuous automatic ejection of modified Premo AID-like igniters with delayed-reaction chemical starters (final concept yet to be designed and tested)

TABLE 5-1 (Cont'd)

ASSESSMENT CRITERIA	EPS IGNITER	DOME IGNITER	LASERS	HELITORCH*	AID-LIKE DEVICE**
Performance in shallow pools (less than 4 in. deep) on solid ice	Good. Shallow draft	Good. Shallow draft	The feasibility of heating and then igniting an oil layer under actual arctic conditions with currently available commercial lasers is being investigated by Environment Canada. Stationary tests on small controlled slicks have been conducted satisfactorily and look very promising.	Experience to date suggests that the deployment of a Helitorch system may provide a means of igniting oil stranded on ice, in shallow melt pools, and possibly on deeper water. Gelled mixtures can be created to give varying sizes and distributions of burning globules that can float and burn for several minutes.	The AID-like device may serve as an effective, self-destructive starter for any number of flammable mixtures that could be attached to the starter and released into the surrounding oil upon ignition.
Dependence on orientation for proper performance	Either of 2 stable, floating positions	Either of 2 stable, floating positions			
Nature and orientation of flame during ignition of oil	Symmetrical 360° burn from perimeter of igniter radially outward. Lightly pressured flame parallel to water/oil surface	Soft, billowy flame concentrated over oil/water surface between floats			
Splash effects during impact with oil and water	Significant, though oil layers greater than 1/10 in. quickly become re-established around igniter	Significant, though oil layers greater than 1/10 in. quickly become re-established around igniter			
Temperature and duration of heat source	2,550°F to 4,170°F for 2 min.	More than 3,700°F for 10 seconds followed by 2,200°F to 2,400°F for approx. 10 min.			
Reliability of starter	Typically greater than 95%	Typically greater than 95%			
Reliability of igniter	Typically greater than 75% (begins to drop after 5-year shelf life)	Typically greater than 90% (begins to drop after 5-year shelf life)			
Sensitivity to temporary submergence upon impact	None	None			
Sensitivity to wind, rain and sea state during ignition	Low	Low			
Type and amount of debris after use	Small metal firing mechanism survives fire, but sinks	Entire metal float package and fuel basket survive fire and remain on water surface	No debris	No debris	Should be no debris
Training requirements	Minimum (about 10 min.). Experience needed in identifying and hitting appropriate "targets"	Minimal (about 10 min.). Experience needed in identifying and hitting appropriate "targets"	Extensive training and field experience required	Extensive training and field experience required	Moderate level of training anticipated

* Or comparable system involving the continuous spraying of a burning fluid or gelled substance

** Continuous automatic ejection of modified Premo AID-like igniters with delayed-reaction chemical starters (final concept yet to be designed and tested)

hand-thrown igniter packages that are relatively bulky and expensive may be satisfactory now for a number of potential spill scenarios. However, a shift toward unique airborne application devices using focused "energy beams" or very small and inexpensive ignition devices could result in improved performance and savings in time and money. Particularly where the targeted oil slicks consist of numerous, small, closely spaced oil concentrations, the most cost-effective mode of ignition may involve the random broadcasting of an ignited gel or of numerous mini-igniters from an automated dispenser. In this latter mode of distributing igniters, considerable effort and time can be saved by not having to (1) create and maintain large inventories and storage areas, (2) transport such inventories to an appropriate staging location, and (3) land or return to base as often to rearrange or pick up igniters.

The rate at which individual ignition points can be achieved is quite important recognizing the limited time that might be available for completing an in-situ burn operation. This time would obviously depend upon many factors including the number and spacing of slicks; their distance from staging locations; their exposure (say, through melt pools in spring) and residence times (due to evaporation, ice movement, etc.); and the weather conditions. However, be it 10 hours or 10 days, one can envision any number of spill situations where the ignition of only a few pools of oil per minute may reduce the burning program to a selection of only the largest pools of oil within the time available. And because of the possible rapid changes in weather and ice conditions, it is not always possible to anticipate the time that will actually be available to reach and ignite a large field of oiled ice.

The average rate of deploying hand-thrown devices (including activation of the starter, aiming, release, and repositioning of the aircraft for the next slick) is generally expected to be between 3 and 6 igniters per minute. A laser ignition system, subject to the current requirements for preheating and ignition, would likely run between 1 and 2 ignitions per minute. And, the AID-like approach could possibly result in many 10's of ignitions per minute. This latter approach is in the early stages of evaluation and is therefore very difficult to assess. It is also hard to anticipate the number of actual successful oil pool contacts and ignitions that might result using such a

random broadcasting technique. Development work scheduled for 1986 may reveal that if such devices are feasible, it may be possible to develop a rapid-fire dispenser that also can be stopped and started quickly and that can be aimed. This would reduce the number of igniters wasted during an otherwise random-toss mode.

With respect to the Helitorch concept, it would be very difficult to estimate the number of successful pool ignitions accomplished per minute because of the dependence on pool distribution. If this approach proves feasible, the rate of producing ignited pools could be quite high and involve swaths of at least 10 ft wide and a mile long per sortie, while the platform is traveling at 25 to 30 mph.

All of the igniter characteristics and operating considerations discussed so far are, of course, important in the selection of a cost-effective ignition system now and for future operations. A most significant area of consideration, however, is the performance of an igniter in presenting sufficient heat long enough and over enough area to ignite and sustain an in-situ burn that can propagate over the entire slick. The success with which an entire slick is consumed is not just related to the performance of the igniter, but more to the thickness and age of the oil being burned and to the placement of the igniter. Even moderate winds in the 10- to 15-kt range have been observed to prevent the upwind propagation of flame over a slick.

The two pyrotechnic devices developed by the EPS and Dome Petroleum Ltd. have been used repeatedly on a variety of oil slicks to demonstrate their effectiveness in igniting and sustaining proper in-situ burns. While the EPS igniter burns a bit hotter than the Dome igniter, the EPS device provides an exposure to flame of only about 2 minutes. The Dome igniter flashes with intense heat (about 3,700^{o}F) for about 10 seconds, followed by approximately 10 minutes of continuous flame in the 2,200^{o}F to 2,400^{o}F range. This extended exposure period can be the difference between success and failure in situations where the oil around the igniter may not be sufficiently thick to support combustion. As winds or currents act on the surface slicks, the volume of oil immediately around the burning igniter may build until, after a few minutes, the thickness is suitable for a self-sustaining fire.

Both of these hand-thrown igniters are subject to problems that can arise when winds are sufficient to remove the vapors (produced during the preheating phase) so rapidly that they cannot be ignited or they are rapidly blown out. The Dome igniter, with its fuel basket suspended between the floats, tends to reduce the potential for this problem by trapping oil and vapors between the floats. It has also been observed during tests with the igniters (and with various types of weed burners), that the "softness" of the flame produced is critical in allowing for a proper heat exchange between the fire and the oil. If the flame is too forceful (as if blown from gas jets) out toward the oil layer, it simply pushes the oil layer away. If, on the other hand, the flame is relatively "soft" and unpressured, the oil can settle around or beneath the flame allowing for a rapid volatilization of the oil and for subsequent ignition.

It is this need for a relatively long (i.e., several minutes) exposure of oil to an intense though "soft" flame that may introduce some of the real-world difficulties in perfecting the laser-induced ignition of oil. The self-sustaining properties of the initial flame produced by the pulsed laser may not be sufficient to overcome the dissipative influence of even a light wind. For totally exposed slick surfaces (i.e., no surface obstructions for the wind), the laser ignition system will have to overcome the negative influences of heated oil moving away from the irradiated surface area and of released vapors being blown away.

Future efforts might focus on the importance of a balanced flame intensity, duration, and "softness" for improved ignition system performance. It may be possible, for example, to combine the target-selection capability of a hand-thrown unit (when desired), and the intensity- and duration-of-burn properties of gelled gasoline/diesel with the safe and simple delayed reaction of a chemically induced starter. By encouraging the mixing and spreading of the gelled medium with the target oil slick, it may be possible to considerably enlarge the area of influence during ignition.

As with the Helitorch alone, an ignition concept involving no post-burn debris is highly advantageous and environmentally sound. This and other desirable features described above will be sought during any followup work. Care will be taken to not only develop a safe, efficient and inexpensive igniter, but to seek a system which because of its simplicity will require a minimum of maintenance and set-up time.

REFERENCES

Belicek, J. and J. Overall, 1978. Some aspects of weathering and burning of crude oil in a water-and-ice environment. A.P.O.A. Review. Arctic Petroleum Operators' Association. Calgary, Alberta. November, 1978. p. 18.

Buist, I.A., W.M. Pistruzak, and D.F. Dickins, 1981. Dome Petroleum's oil and gas undersea ice study. Proceedings of the Fourth Arctic Marine Oilspill Program Technical Seminar. Research and Development Division, Environmental Emergency Branch, Environmental Protection Service, Ottawa, Ontario. pp. 647-686.

Buist, I.A., W. Pistruzak, S.G. Potter, and N. Vanderkooy, 1983. The development and testing of a fireproof boom. Proceedings of the 1983 Oil Spill Conference. American Petroleum Institute. Washington, D.C. Publication No. 4356. pp. 43-51.

Dickins, D.F., 1979. Air-Deployable Oil Spill Igniter Tests -- Yellowknife, May 14, 1979. Prepared for Canadian Marine Drilling Ltd. Calgary, Alberta.

Energetex Engineering, 1978. Testing of Air-Deployable Incendiary Devices for Igniting Oil on Water. Submitted to Environmental Protection Service. Ottawa, Ontario.

Energetex Engineering, 1981. Burning of Crude Oil Under Wind Herding Conditions. Submitted to Canadian Marine Drilling Ltd., Calgary, Alberta.

Energetex Engineering, 1982. Final Report, Environmental Testing of the Dome Air-Deployable Igniter. Prepared for Dome Petroleum Ltd. Calgary, Alberta.

Frish, M.B., M.A. DeFaccio, P.E. Nebolsine, and G.A. Simons, 1985. Laser ignition of arctic marine oil spills. Proceedings of the Eighth Annual Arctic Marine Oilspill Program Technical Seminar. Technical Services Branch, Environmental Protection Service. Ottawa, Ontario. pp. 166-175.

Golden, LTJG P.C., 1974. Oil removal techniques in an arctic environment. MTS Journal. January, 1974. pp. 38-43.

Greene, G.D., P.J. Leinonen, and D. Mackay, 1977. An exploratory study of the behavior of crude oil spills under ice. The Canadian Journal of Chemical Engineering. Vol. 55. December, 1977. pp. 696-700.

Industry Task Group, 1983. Oil Spill Response in the Arctic, Part 2. Field Demonstrations in Broken Ice. Shell Oil Company, Sohio Alaska Petroleum Company, Exxon Company, U.S.A., and Amoco Production Company. Anchorage, AK.

McLeod, W.R., and D.L. McLeod, 1974. Measures to combat arctic and subarctic oil spills. Journal of Petroleum Technology. March, 1974. pp. 269-278.

McMinn, LTJG T.J. and LTJG P. Golden, 1973. Behavioral characteristics and cleanup techniques of North Slope crude oil in an arctic winter environment. Proceedings of Joint Conference on Prevention and Control of Oil Spills. American Petroleum Institute. Washington, D.C. pp. 263-276.

Meikle, K.M., 1981. An oil slick igniter for remote areas. Proceedings of the 1981 Oil Spill Conference. American Petroleum Institute. Washington, D.C. Publication No. 4334. 617-621.

Nelson, W.G. and A.A. Allen, 1982. The physical interaction and cleanup of crude oil with slush and solid first year sea ice. Proceedings of the Fifth Arctic Marine Oilspill Program Technical Seminar. Research and Development Division, Environmental Emergency Branch, Environmental Protection Service. Ottawa, Ontario. pp. 31-59.

Pallister, J., 1978. Oil spill contingency measures for the arctic offshore: research and practices. A.P.O.A. Review. Arctic Petroleum Operators' Association. Calgary, Alberta. November, 1978. p. 11.

S.L. Ross Environmental Research Ltd., 1981. The Use of Aerially-Deployed Igniters for an Oil Blowout in the Southern Beaufort Sea. Prepared for Dome Petroleum Ltd.

S.L. Ross Environmental Research Ltd., 1984. Igniter Requirements for a Major Oil Spill from a Vessel in the Canadian Arctic. Prepared under contract to Research and Development Division, Environmental Emergency Branch, Environmental Impact Control Directorate, Environmental Protection Service, Environment Canada. Ottawa, Ontario.

Schultz, L.A., 1976. Tests of the Arctic Boat Configuration of the Lockheed Clean Sweep Oil Recovery System in a Broken Ice Field. Submitted to Canadian Marine Drilling, Ltd. by Arctec Canada, Ltd. Montreal, Quebec. APOA Project No. 97.

Twardawa, P. and G. Couture, 1983. Incendiary Devices for the In-Situ Combustion of Crude Oil Slicks. Defence Research Establishment, Valcartier, Quebec. Prepared under contract to Research and Development Division, Environmental Emergency Branch, Environmental Impact Control Directorate, Environmental Protection Service, Environment Canada. Ottawa, Ontario. Draft.