Bureau of Ocean Energy Management, Regulation and Enforcement

Deepwater Drilling Safety, Containment and Spill Response

Houston, TX
September 7, 2010

Dr. Richard C. Haut
Senior Research Scientist
Houston Advanced Research Center

Topics to Cover

- Human side of offshore safety
- Research and technology development opportunities related to safety
- Current initiatives

Well 2/4-14: January 1989

- Water depth of 200 ft.
- Well control situation encountered.
  - Two uncontrolled flows to the surface.
  - Shear rams activated.

Well 2/4-14: January 1989

- Water depth of 200 ft.
- Well control situation encountered.
  - Two uncontrolled flows to the surface.
  - Shear rams activated.
- Well status on 1/20/1989
  - 10,000 psi shut-in pressure
  - 15,000 ft of 5” drill pipe
  - 14,000 ft of coiled tubing
  - Burst 9-5/8” casing

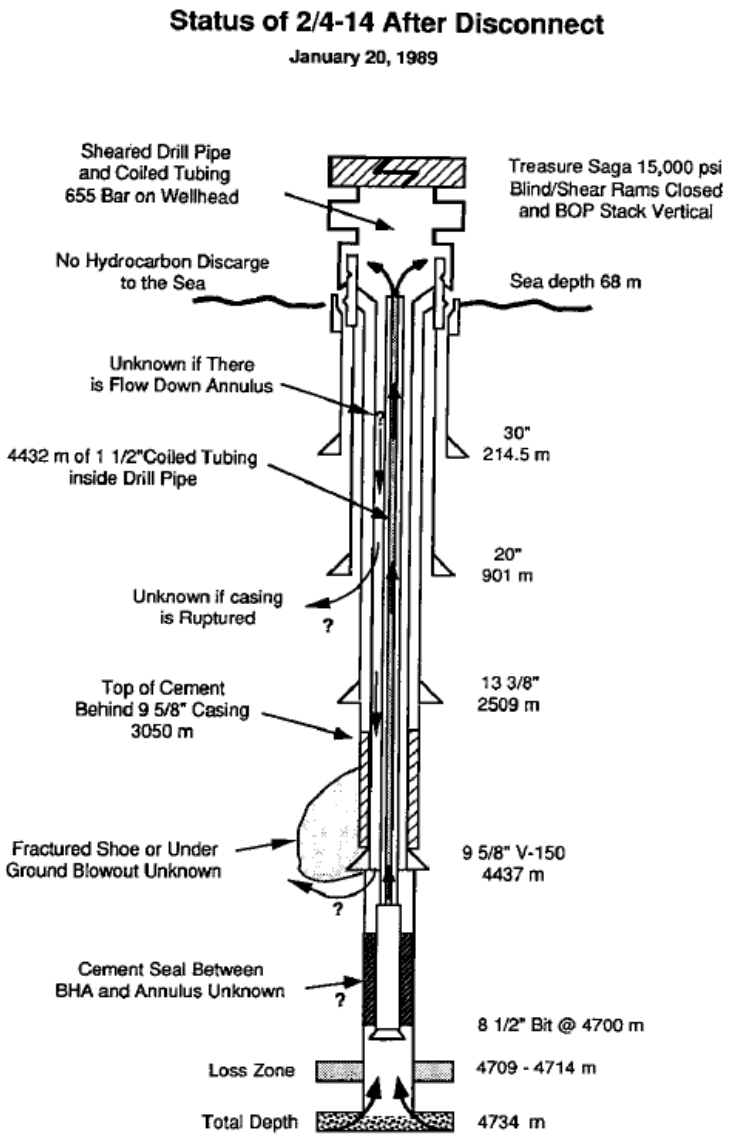

295 days later *(plus 4 months for clean-up)*

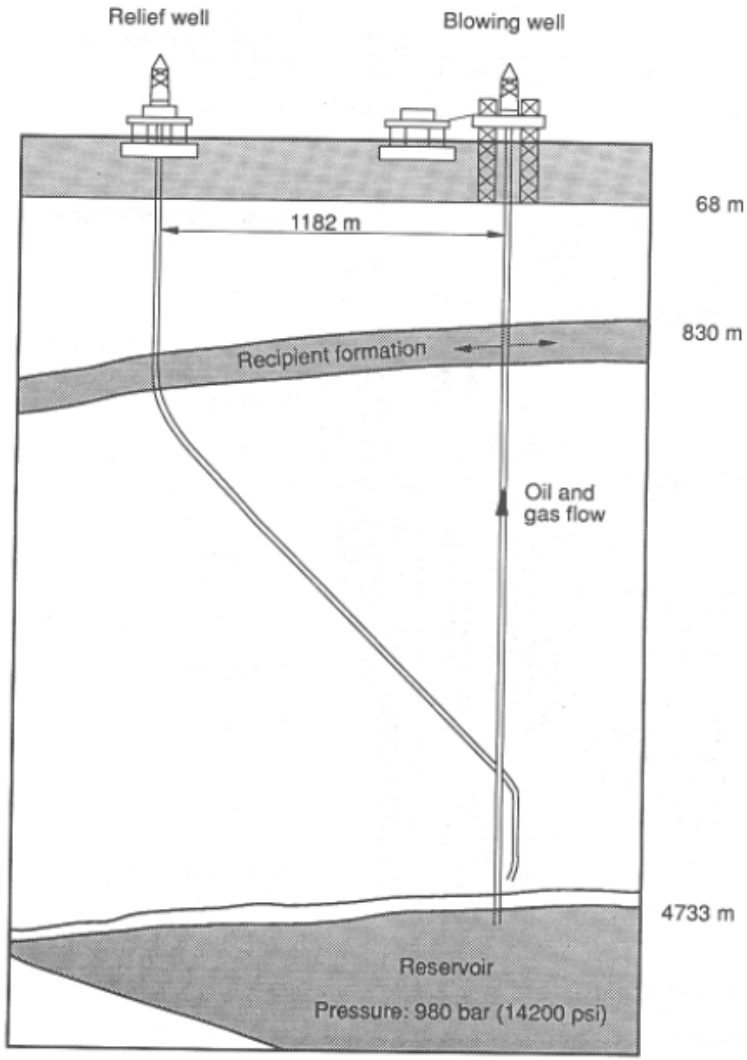

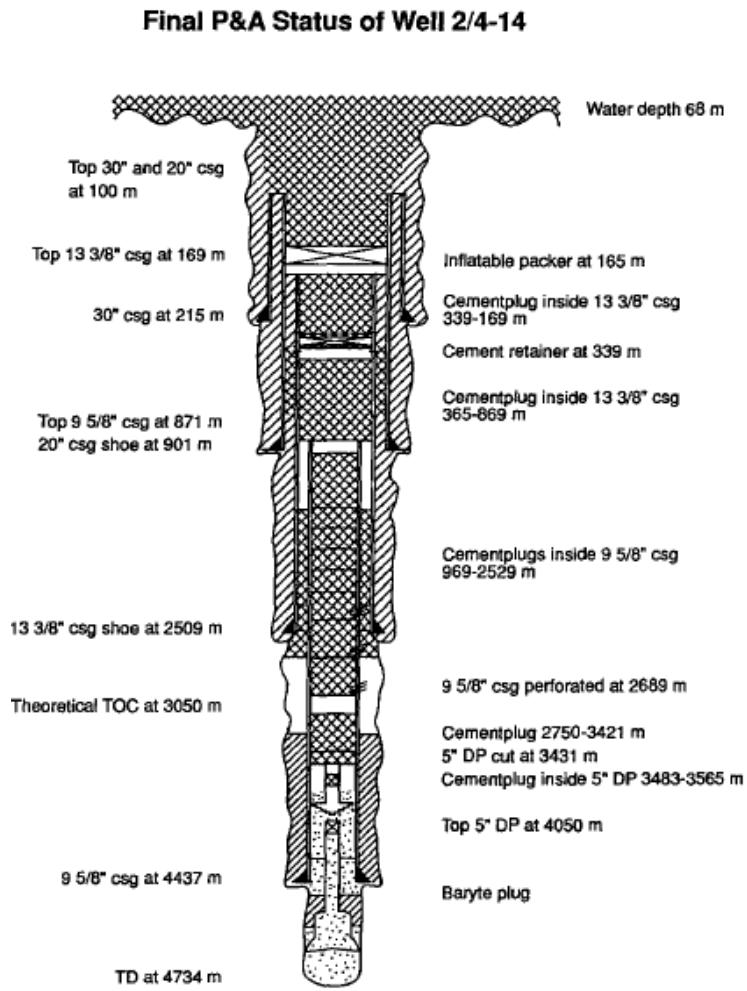

Lessons Learned

- Safety Culture did not prevent the well control incident from occurring.

- Culture of safety and a respect for the environment ensured operations were carried out in a safe and environmentally sensitive manner.
  - Well re-entry
  - Relief well drilling
  - Well killing operations
  - Well plugging operations

Culture of Safety

- Safety is personal
- Everyone takes responsibility
  - Follow regulations
  - Use equipment correctly
  - Recognize and reduce at-risk behaviors

Research & Development

RPSEA
Research Partnership to Secure Energy for America

HARC

July 22nd Forum

- 125 Participants
  - All stakeholders

- Identify R&D
  - Prevention
  - Response
  - Ecosystems

Agenda

0900 – 0930	Registration and Coffee
0930 – 0940	Welcome, introductions
0940 – 1000	***The Research Partnership to Secure Energy for America: Refocused and Responsive*** Dr. Steve Holditch, Chairman of the RPSEA Board of Directors
1000 – 1030	***Keynote: Observations from The Deepwater Horizon Incident*** Dr. Edward Overton, Professor Emeritus, Dept. of Environmental Sciences, Louisiana State University
1030 – 1100	***Special Congressional Discussion – Update from Washington D.C.*** Congressman Kevin Brady, District 8, Texas
1100 – 1115	Break
1115 – 1245	***Panel Discussion – What's Going On? What Else Can Go Wrong?*** - *Hearings, Briefings and Other Items* Tom Williams/Nautilus: *The U.S. Department of Interior's Response* Paul Martin/MMS—Retired: *History of the TA&R Program* Quenton Dokken/Gulf of Mexico Foundation: *Valuation of Ecosystem Services* David Dietrich/AcuSea, Inc: *Oil Spill Modeling* Greg Anderson/Moody International: *Creating A Culture of Well Control Safety* followed by other items and discussion/brainstorming session
1245 – 1255	***Overview of Breakout Sessions*** There will be three simultaneous breakout groups – one for each of three areas (preventive technologies, response technologies, ecosystem monitoring/valuation). Two sessions will be held to allow participants to have input into more than one area.
1255	***Boxed lunches distributed – to be taken with you to Breakout Session I***
1300 – 1400	***Breakout Session I – Defining the Needs*** – first brainstorming round to identify needs and prioritize.
1400 – 1415	Break
1415 – 1500	***Breakout Session II – Prioritizing the Needs*** – review the needs and confirm prioritization.
1500 – 1545	***Plenary Review of Breakout Sessions*** (Breakout Session Reports)
1545 – 1600	***Where do we go from here?*** Recapping the Day

R&D Opportunities: Safety Related

Based on July 22nd Forum

- Preventing incidents from occurring – build upon the state-of-the-art
- Review/evaluate existing safeguards and international processes
- Top priority – risk assessment & management

July 22nd Forum – Notable Idea

- Establish Safety Board similar to NTSB or CSB.
- Option – Have NTSB or CSB establish a category to cover oil and gas operational incidents.

The Department of Interior Response

- May 27, 2010 Secretary of Interior Safety Report "Increased Safety Measures for Energy Development on the Outer Continental Shelf" included:
  - API Joint Industry Task Force Recommendations
  - Comments and Recommendations from experts and review from experts with the National Academy of Engineering

- NTL 2010-N04 (new safety measures); NTL-05 (re-certification of BOP and limit of 500'); NTL-06 (all assumptions, demonstrate worse case response scenario)

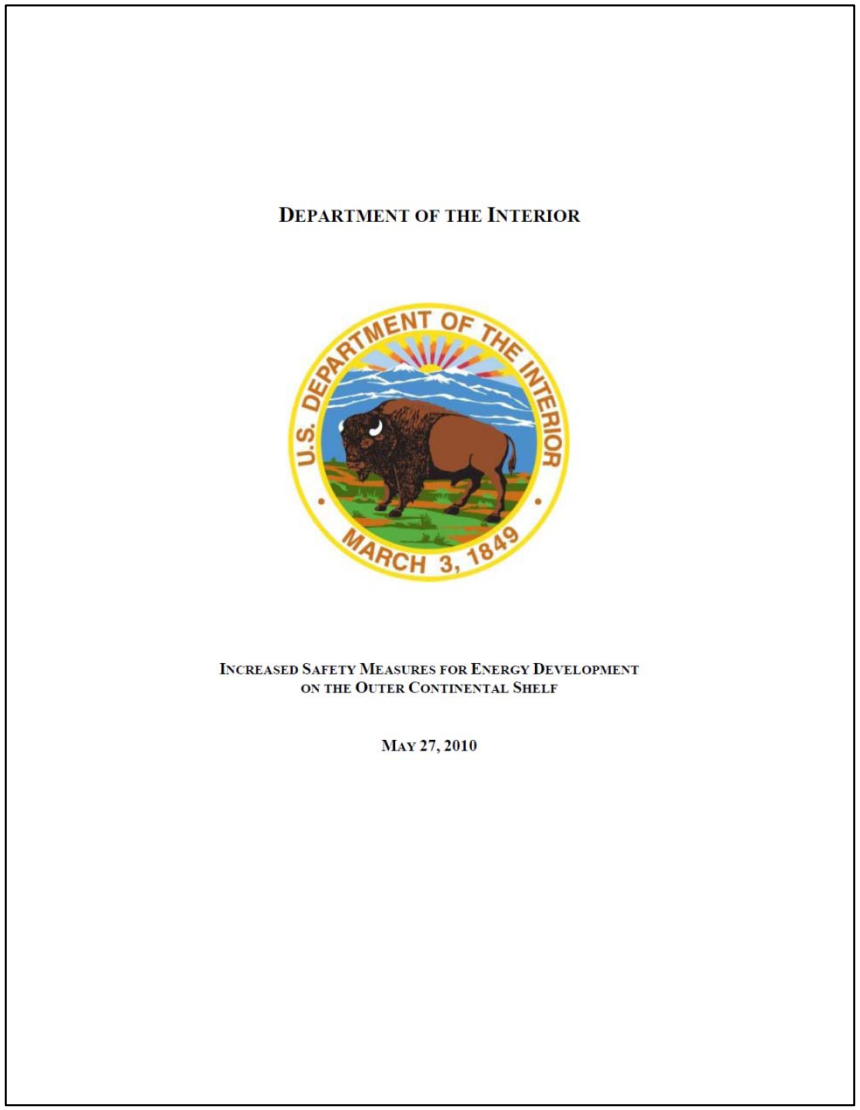

DEPARTMENT OF THE INTERIOR

INCREASED SAFETY MEASURES FOR ENERGY DEVELOPMENT ON THE OUTER CONTINENTAL SHELF

MAY 27, 2010

Joint Industry Task Forces

- **Offshore Equipment**
  - BOP equipment design, testing protocols, regulations, documentation to determine gaps/improvements
- **Offshore Procedures**
  - Processes associated with drilling and competing deep water wells – identify gaps between existing practices & regulations and industry best practices; recommendations to improve industry standards to a higher level (safety & operationally)
- **Subsea Well Control and Containment**
  - Review technologies and practices associated with oil spill preparedness and response subsea and surface. Gaps/options through better practices and R&D
- **Oil Spill Response**
  - Review existing spill-response processes and technologies; identify gaps and options to address those gaps through recommended practices, procedures and R&D
- **Oil Spill Liability**
  - Review current US and relevant international oil spill liability regime and legislative proposals; make recommendations to improve the liability system

Chevron ExxonMobil ConocoPhillips

Industry Initiative to Ensure Safe, Protective Drilling Practices in the Deepwater GoM

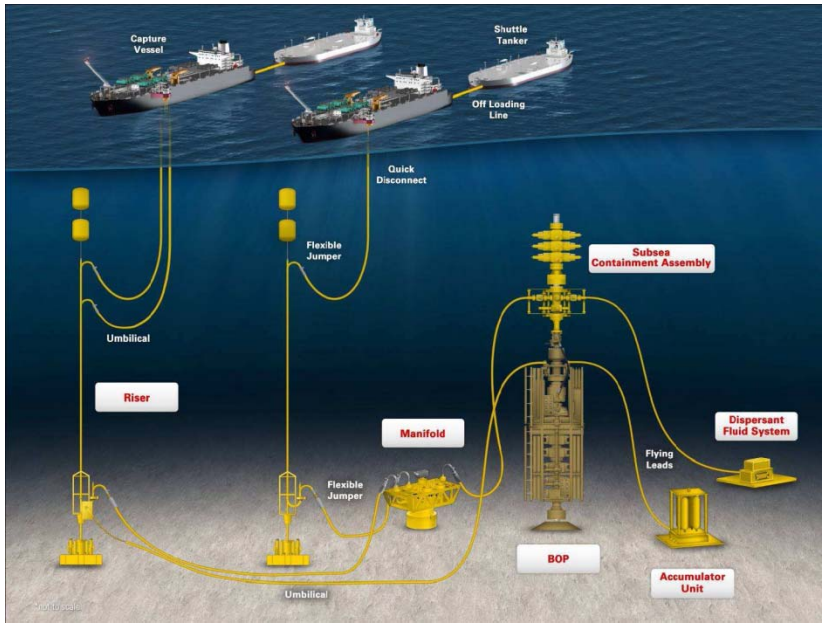

National Commission on the BP Deepwater Horizon Oil Spill & Offshore Drilling

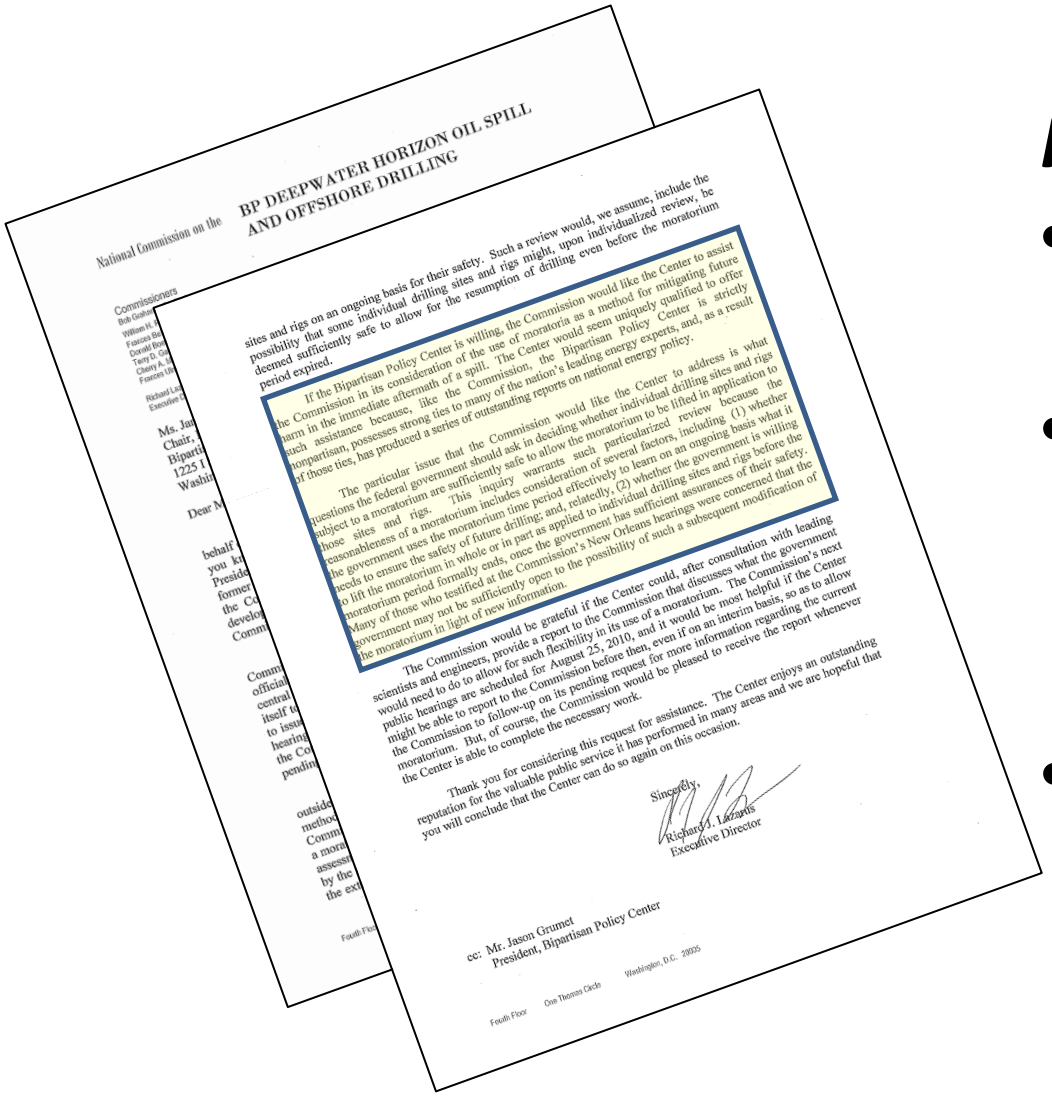

National Commission on the BP DEEPWATER HORIZON OIL SPILL AND OFFSHORE DRILLING

Commissioners

sites and rigs on an ongoing basis for their safety. Such a review would, we assume, include the possibility that some individual drilling sites and rigs might, upon individualized review, be deemed sufficiently safe to allow for the resumption of drilling even before the moratorium period expired.

If the Bipartisan Policy Center is willing, the Commission would like the Center to assist the Commission in its consideration of the use of moratoria as a method for mitigating future harm in the immediate aftermath of a spill. The Center would seem uniquely qualified to offer such assistance because, like the Commission, the Bipartisan Policy Center is strictly nonpartisan, possesses strong ties to many of the nation's leading energy experts, and, as a result of those ties, has produced a series of outstanding reports on national energy policy.

The particular issue that the Commission would like the Center to address is what questions the federal government should ask in deciding whether individual drilling sites and rigs subject to a moratorium are sufficiently safe to allow the moratorium to be lifted in application to those sites and rigs. This inquiry warrants such particularized review because the reasonableness of a moratorium time period effectively to learn on an ongoing basis what it the government uses the moratorium time period effectively to learn on an ongoing basis what it needs to ensure the safety of future drilling; and, relatedly, (2) whether the government is willing to lift the moratorium in whole or in part as applied to individual drilling sites and rigs before the moratorium period formally ends, once the government has sufficient assurances of their safety. Many of those who testified at the Commission's New Orleans hearings were concerned that the government may not be sufficiently open to the possibility of such a subsequent modification of the moratorium in light of new information.

The Commission would be grateful if the Center could, after consultation with leading scientists and engineers, provide a report to the Commission that discusses what the government would need to do to allow for such flexibility in its use of a moratorium. The Commission's next public hearings are scheduled for August 25, 2010, and it would be most helpful if the Center might be able to report to the Commission before then, even if on an interim basis, so as to allow the Commission to follow-up on its pending request for more information regarding the current moratorium. But, of course, the Commission would be pleased to receive the report whenever the Center is able to complete the necessary work.

Thank you for considering this request for assistance. The Center enjoys an outstanding reputation for the valuable public service it has performed in many areas and we are hopeful that you will conclude that the Center can do so again on this occasion.

Sincerely,

Richard J. Lazarus
Executive Director

cc: Mr. Jason Grumet
President, Bipartisan Policy Center

Fourth Floor One Thomas Circle Washington, D.C. 20005

Five member work group

- Bipartisan Policy Center
- Assist commission in consideration of use of moratoria
- Identify questions to be asked

Conclusions

- **Culture of Safety**
  - Safety is Personal
  - Does not prevent well control incidents

- **Research & Development**
  - Top Priority: Risk assessment and management
  - Build upon state-of-the-art
  - Need all stakeholders engaged

- **Current Initiatives**
  - Various Joint Industry Programs

Contact Information

Richard C. Haut, Ph.D.
Houston Advanced Research Center
4800 Research Forest Drive
The Woodlands, TX 77381

rhaut@harc.edu
281-364-6093

www.harc.edu